UNAUTHORIZED USE OF THIS DRAWING IS STRICTLY PROHIBITED

DAR	REV	DESCRIPTION	APPVD	DATE
2175	A	INITIAL RELEASE	TJD	12–09
2613	B	SEE DAR	DG	7–10
2781	C	SEE DAR	DG	11–10
3119	D	SEE DAR	DG	6–11
4190	E	SEE DAR	DG	3–13
4354	F	SEE DAR	DG	6–13
4450	G	SEE DAR	DG	7–13
4840	H	SEE DAR	DG	3–14
5113	J	SEE DAR	DG	8–14

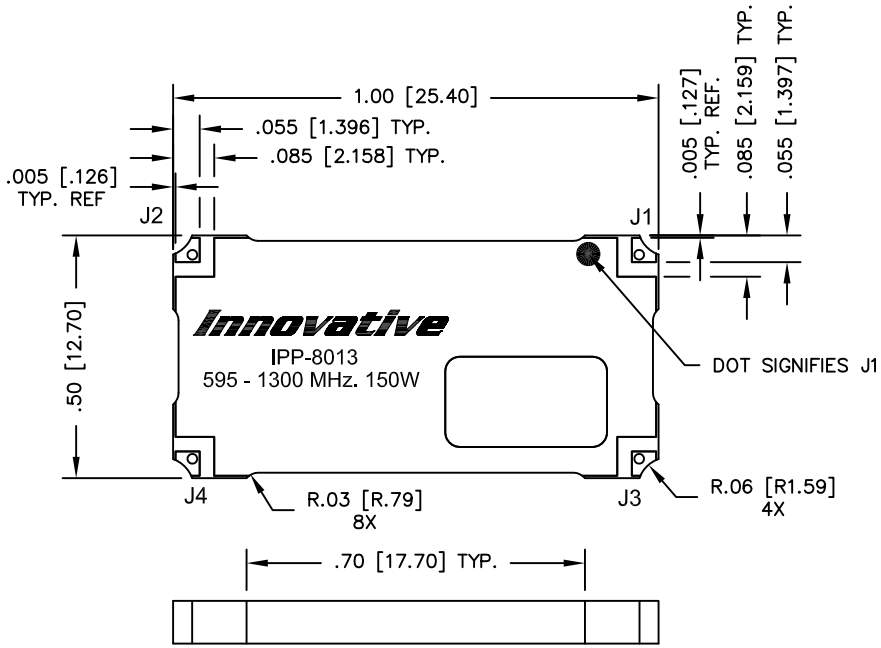

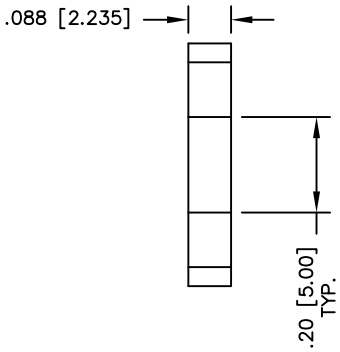

FINISH	
P/N	TYPE
IPP–8013	TIN/LEAD

NOTES:
1. SEE SMD COUPLER APPLICATION NOTE FOR FURTHER INFORMATION.
2. AVAILABLE IN TAPE AND REEL. SEE SMD COUPLER APPLICATION NOTE FOR FURTHER INFORMATION.
3. DO NOT EXCEED 220°C WHEN INSTALLING COUPLER.

PORT CONFIGURATION			
INPUT	OUTPUT	FORWARD COUPLED	REFLECTED COUPLED
J1	J2	J3	J4 ADD 50Ω TERMINATION

ELECTRICAL SPECIFICATIONS

FREQUENCY:	595 – 1300 MHz.
INSERTION LOSS:	<0.25 dB
MAIN LINE VSWR:	<1.25:1
CPL LINE VSWR:	<2.5:1
COUPLING:	34dB ±1.0 dB
COUPLING FLATNESS:	±0.75 dB
DIRECTIVITY:	>18 dB
POWER:	150 WATT
TEMPERATURE:	–55°C TO +100°C

MATERIAL	DWN DG	DATE 11-09	Innovative Power Products
FINISH SEE FINISH CHART	ENG TJD	DATE 11-09	TITLE OUTLINE, SMD COUPLER SDC, 595 - 1300 MHz 34dB 150W
	MANUF	DATE	
TOLERANCE IN [MM] .XX ±.02 [.50] .XXX ±.010 [.254] ANG. ±1/2°	CAGE CODE: 437R2		
	SHEET 1 OF 1	SCALE 4:1	SIZE B / P/N IPP-8013 / REV. J