REV.	DATE	DESCRIPTION
NC	02/19/02	INITIAL RELEASE

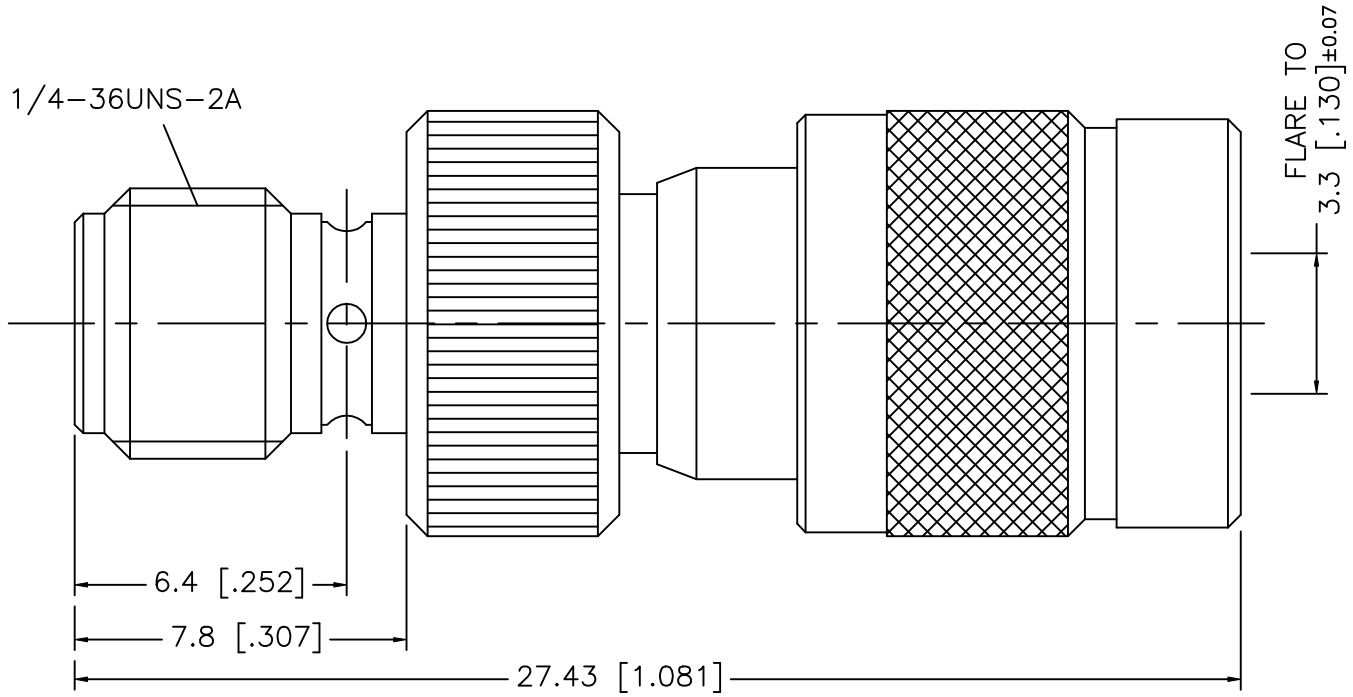

8	SHELL	BRASS	NICKEL
7	SPRING	BER. COPPER	NATURAL
6	BODY	BRASS	NICKEL
5	CONTACT PIN	BER. COPPER	GOLD
4	INSULATOR	TEFLON	NATURAL
3	INSULATOR	TEFLON	NATURAL
2	OUT CONTACT	PHOS. BRONZE	GOLD
1	HOUSING	BRASS	GOLD
	DESCRIPTION	MATERIAL	FINISH

UNLESS OTHERWISE SPECIFIED DIMENSIONS ARE IN MILLIMETERS

DIMENSIONS IN [ ] ARE IN INCHES FOR CUSTOMER REFERANCE ONLY

UNLESS OTHERWISE SPECIFIED TOLERANCES FOR MILLIMETERS ARE:

0.5–6 = ± 0.2
6–30 = ± 0.4
30–120 = ± 0.6
120–315 = ± 1
315–1000 = ± 1.6
1000–2000 = ± 2.4

DO NOT SCALE DRAWING

APPROVALS		DATE
DRAWN	G.R.S.	02/19/02
CHECKED		
ISSUED		

Amphenol - Connex
CONNECTOR CORPORATION

TITLE: SMA JACK TO 1.0/2.3 PLUG ADAPTOR

SIZE	FSCM NO.	DWG. NO.	REV.
A	99001	242179.DWG	NC

SCALE	PART NO.	SHEET
NA	242179	1 OF 1