THIS DRAWING IS UNPUBLISHED. RELEASED FOR PUBLICATION -,- .
© COPYRIGHT - BY TYCO ELECTRONICS CORPORATION. ALL RIGHTS RESERVED.

LOC	DIST
CM	53

REVISIONS

P	LTR	DESCRIPTION	DATE	DWN	APVD
	AG	ECO-06-013896	31AUG06	BSV	GSR

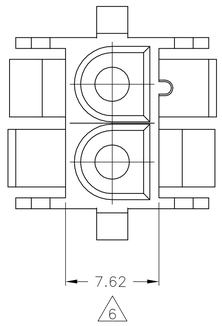

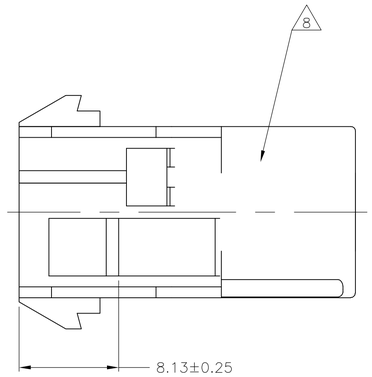

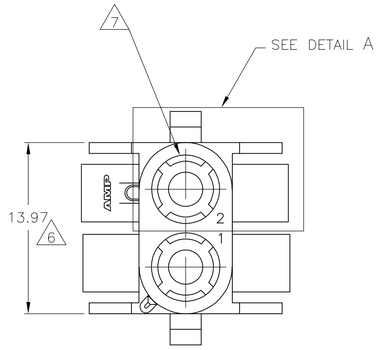

1. MATES WITH APPROPRIATE UNIVERSAL MATE-N-LOK™ PLUG.
2. RECOMMENDED PANEL THICKNESS 0.76 – 2.29.
3. PANEL MUST BE PUNCHED SO THAT THE HOUSING ENTERS THE PANEL IN THE SAME DIRECTION AS THE PUNCH.

4. OPTIONAL FOR KEYING HOUSING IN PANEL.

5. CIRCUIT NUMBER 1 LOCATION.

6. DIMENSION INDICATED IS AS MOLDED. ADDITIONAL GROWTH DUE TO SUBSEQUENT MOISTURE ABSORPTION MAY OCCUR.

7. FOUR RIBS EQUALLY SPACED, NO SPECIFIC ORIENTATION. NO RIBS OR SIX RIBS EQUALLY SPACED, NO SPECIFIC ORIENTATION, OPTIONAL.

8. UNDERWRITERS RECOGNIZED COMPONENT LOGO AND CSA CERTIFICATION LOGO TO BE LOCATED ONCE EACH ON SIDE OF HOUSING.

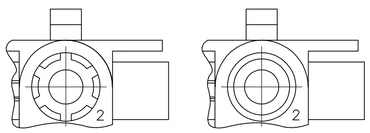

DETAIL A
OPTIONAL CONSTRUCTIONS

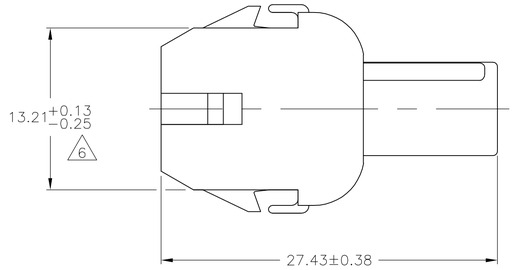

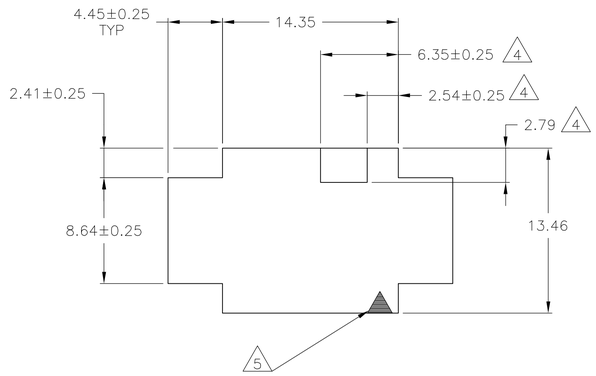

RECOMMENDED PANEL CUTOUT

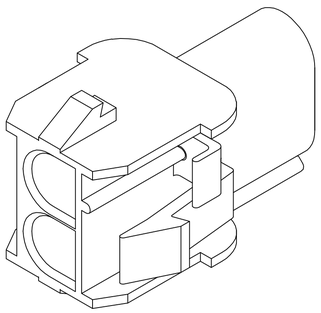

3-DIMENSIONAL MODEL
NTS

4.45	.175	27.43	1.080
2.79	.110	14.35	.565
2.54	.100	13.97	.550
2.41	.095	13.46	.530
2.29	.090	13.21	.520
0.76	.030	8.64	.340
0.38	.015	8.13	.320
0.25	.010	7.62	.300
0.13	.005	6.35	.250
MM	IN	MM	IN

CONVERSION TABLE

COLOR	PART NO.
BLACK	1-480699-9
GREY	1-480699-8
BLUE	1-480699-6
GREEN	1-480699-5
YELLOW	1-480699-4
ORANGE	1-480699-3
RED	1-480699-2
BROWN	1-480699-1
NATURAL	1-480699-0

METRIC

THIS DRAWING IS A CONTROLLED DOCUMENT.

DIMENSIONS: mm

TOLERANCES UNLESS OTHERWISE SPECIFIED:
0 PLC ± –
1 PLC ± –
2 PLC ± 0.13
3 PLC ± –
4 PLC ± –
ANGLES ± 1° 0'

MATERIAL: NYLON,UL 94V-2
FINISH: –

DWN K. WHITAKER 24JUL92
CHK R.SWING 24JUL92
APVD D. SELF 27JUL92
PRODUCT SPEC —
APPLICATION SPEC —
WEIGHT —

tyco Electronics
Tyco Electronics Corporation
Harrisburg, Pa 17105-3608

NAME: CAP,2 CIRCUIT, UNIVERSAL MATE-N-LOK (TM)

SIZE	CAGE CODE	DRAWING NO	RESTRICTED TO
A1	00779	C-480699	—

CUSTOMER DRAWING | SCALE 4:1 | SHEET 1 OF 1 | REV AG