ROHS COMPLIANT

PRODUCT DATA DRAWING

REVISION HISTORY			
REV	DESCRIPTION	DATE	APPROVED
-	DCN 35555	12/07	STW
A	DCN 35979	07/08	JMC

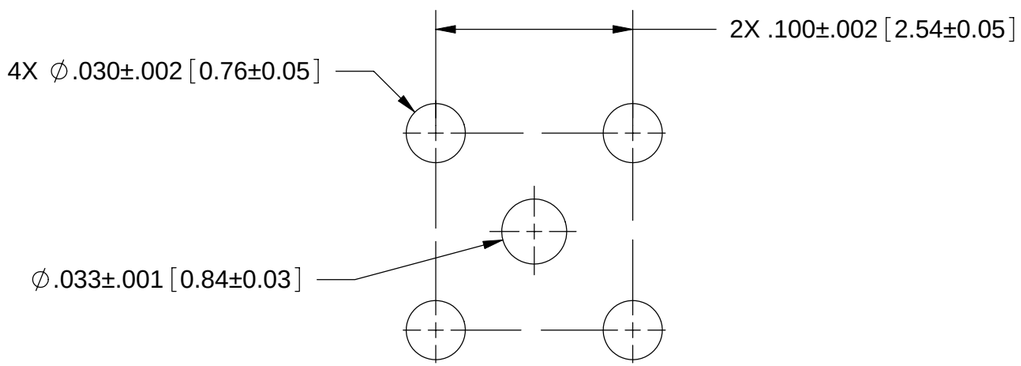

RECOMMENDED MOUNTING HOLE PATTERN

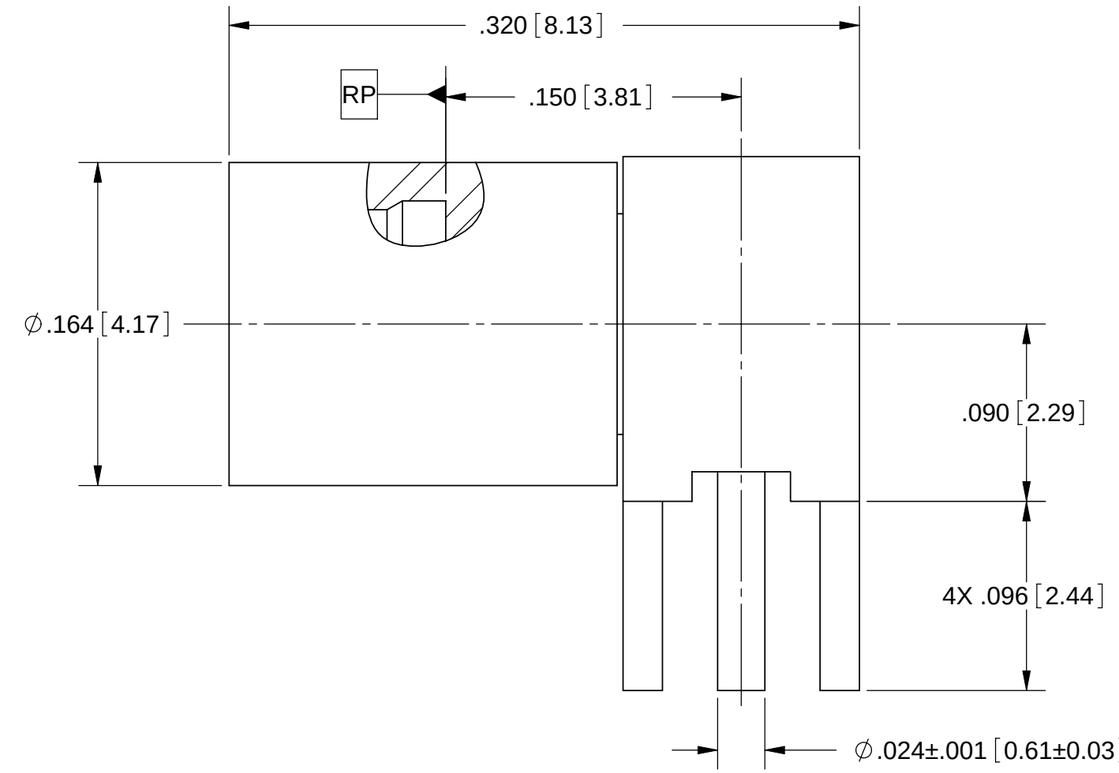

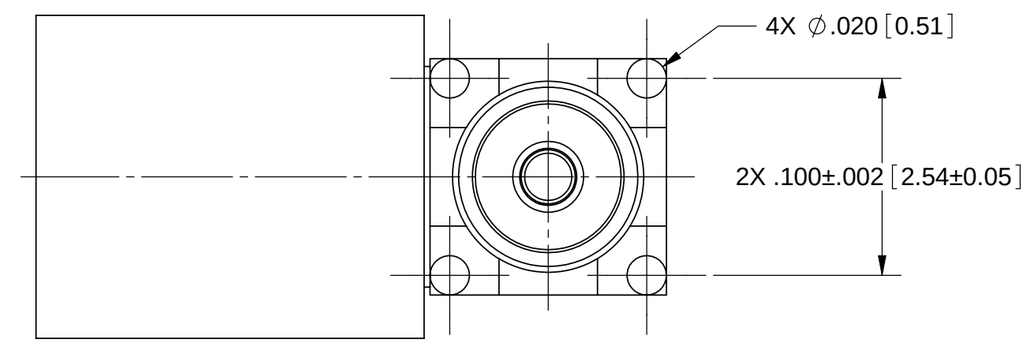

MATERIAL:

INTERFACE BODY:	STAINLESS STEEL ALLOY S30300, TYPE 303, COND. A PER AMS-5640
PC LEG BODY & CONTACT:	BERYLLIUM COPPER PER ASTM B196, ALLOY C17300, TD 04
INSULATOR:	PTFE PER ASTM D1710

FINISHES:

INTERFACE BODY:	PASSIVATED PER AMS-2700, TYPE 2
PC LEG BODY & CONTACT:	GOLD PER ASTM B488, TYPE II, CODE C, CLASS 1.27; OVER NICKEL PER AMS-QQ-N-290, CLASS 1, .00005" MIN.

PERFORMANCE:

IMPEDANCE:	50 OHMS
FREQ. RANGE:	DC TO 20 GHz
V.S.W.R.:	1.35:1 DC TO 20 GHz
D.W.V.:	500 VRMS
INSULATION RES.:	5,000 MEGOHMS MINIMUM

MATERIAL: SEE NOTES

FINISH: SEE NOTES

SURFACE AREA: N/A

PROPRIETARY

THE INFORMATION CONTAINED IN THIS DRAWING IS THE SOLE PROPERTY OF SV MICROWAVE, INC. ANY REPRODUCTION IN PART OR AS A WHOLE WITHOUT THE WRITTEN PERMISSION OF SV MICROWAVE, INC IS PROHIBITED.

DIMENSIONS ARE IN INCHES TOLERANCES:

FRACTIONAL: ±1/64 ANGULAR: X° ±1°0' X°X' ±15'

DECIMAL: .X ±.030 .XX ±.010 .XXX ±.005

INTERPRET DIMENSIONS AND TOLERANCES PER ASME Y14.5M - 1994

THIRD ANGLE PROJECTION

UNLESS OTHERWISE SPECIFIED

1) ALL DIMENSIONS ARE IN INCHES [MILLIMETERS]
2) ALL DIMENSIONS ARE AFTER PLATING.
3) BREAK CORNERS & EDGES .005 R. MAX.
4) CHAM. 1ST & LAST THREADS.
5) SURFACE ROUGHNESS 63₄MIL-STD-10.
6) DIA.'S ON COMMON CENTERS TO BE CONCENTRIC WITHIN .005 T.I.R.
7) REMOVE ALL BURRS

DRAWN:	HLP 12/03/07
CHECKED:	STW 12/03/07
APPROVED:	STW 12/03/07

SV Microwave, Inc.
2400 Centrepark West Drive, Suite 100
West Palm Beach, FL 33409

TITLE: SMP MALE R/A PC MOUNT FULL DETENT

SIZE	CAGE CODE	DWG. NO.
B	95077	1212-6000

SCALE: 13:1

SHEET 1 OF 1