REV.	DATE	DESCRIPTION
NC	06/11/02	INITIAL RELEASE

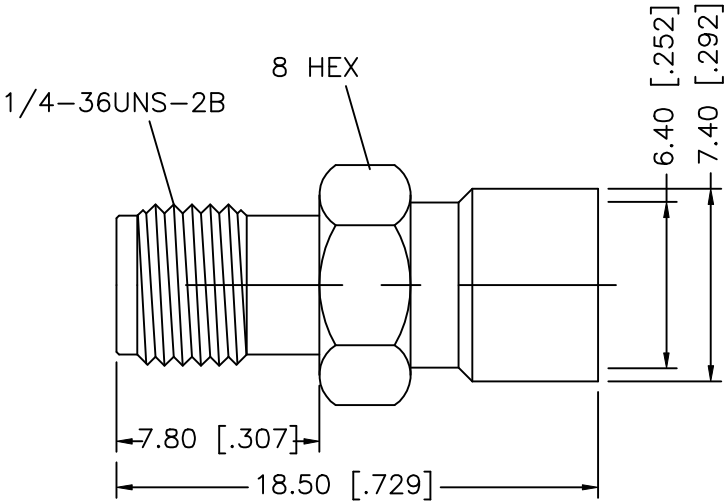

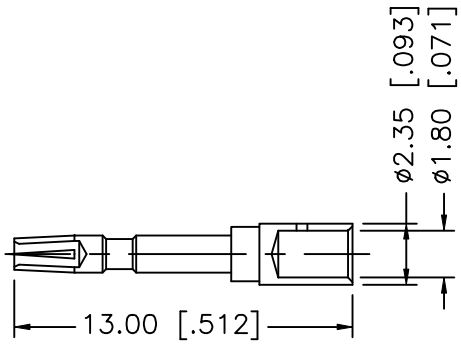

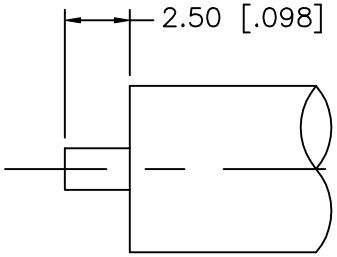

RECOMMENDED
CABLE STRIPPING DIM'S

NOTE:
1) SOLDER CENTER CONTACT

8			
7			
6			
5			
4			
3	CONTACT PIN	BRASS	GOLD
2	INSULATOR	TEFLON	NATURAL
1	BODY	BRASS	GOLD
	DESCRIPTION	MATERIAL	FINISH

UNLESS OTHERWISE SPECIFIED DIMENSIONS ARE IN MILLIMETERS

DIMENSIONS IN [ ] ARE IN INCHES FOR CUSTOMER REFERANCE ONLY

UNLESS OTHERWISE SPECIFIED TOLERANCES FOR INCHES ARE:

.XXX = ± 0.005"
.XX = ± 0.010"
.X = ± 0.020"

DO NOT SCALE DRAWING

APPROVALS		DATE
DRAWN	G.R.S.	06/11/02
CHECKED		
ISSUED		

Amphenol - Connex
CONNECTOR CORPORATION

TITLE: SMA DIRECT SOLDER JACK (.250" SEMI RIGID CABLE)

SIZE	FSCM NO.	DWG. NO.	REV.
A	99001	132345.DWG	NC
SCALE NA	PART NO. 132345	SHEET 1 OF 1	