P/N	APPLICABLE NOTE(S)	CABLE TYPE(S)
-1CCSF	1,2,3	M17/93-RG178, M17/93-00001
-2CCSF	1,2,3	Ø .047 SEMI-RIGID

REVISIONS				
ZONE	REV	DESCRIPTION	DATE	BY
-	A	ECO 15213	01.15.03	AGK
-	B	ECO 17348	08.20.04	JF

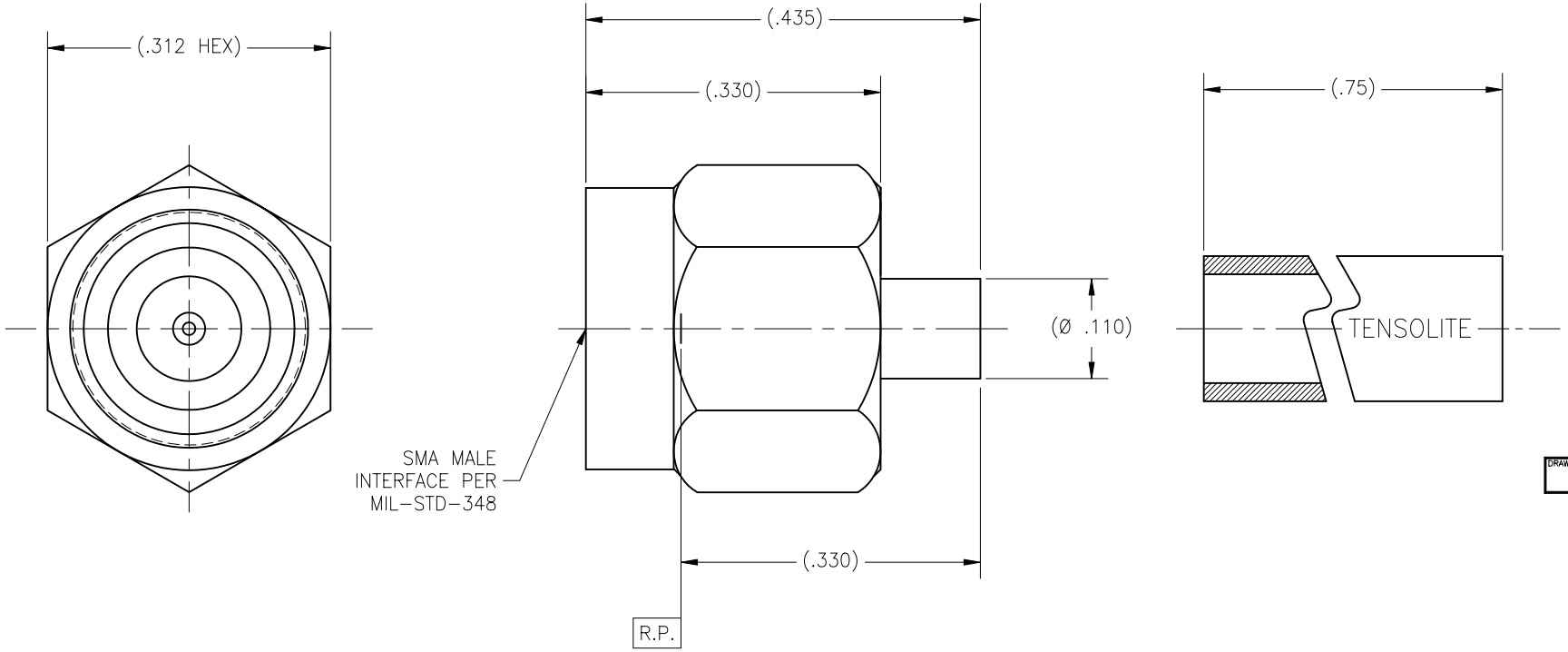

DRAWING NO.	REV.
5213	B

NOTE(S):

1. MATERIALS:
   1.1 BODY & COUPLING NUT 303 SST PER ASTM A-582.
   1.2 CENTER CONDUCTOR & RETAINING RING: BeCu ALLOY C173 PER ASTM B-196.
   1.3 GASKET: SILICON RUBBER PER ZZ-R-765
   1.4 INSULATOR: PTFE PER ASTM D-1710
   1.5 EPOXY: SIGMA VF TYPE HV.
   1.6 SHRINK TUBING: RAYCHEM PRODUCT ATUM, SPECIFICATION RK-6025.
2. FINISH(ES):
   2.1 COUPLING NUT: PASSIVATE PER ASTM A967.
   2.2 BODY, CENTER CONDUCTOR & COUPLING NUT: GOLD PLATED PER ASTM B-488 OVER NICKEL PLATED PER AMS-QQ-N-290.
   2.3 INSULATOR, RETAINING RING, EPOXY, SHRINK TUBING, & GASKET: NONE.
3. COUPLING NUT, SHRINK TUBING, GASKET & CENTER CONDUCTOR TO BE PACKAGED AND SHIPPED UNASSEMBLED.

APPLICABLE TENSOLITE DOCUMENTS

WORK STD	PROD INST	ASSY INST
NA	NA	NA

NOTICE

THIS DRAWING EMBODIES A CONFIDENTIAL PROPRIETARY DESIGN ORIGINATED BY TENSOLITE COMPANY AND ALL DESIGN, MANUFACTURING REPRODUCTION, USE AND SALE RIGHTS REGARDING THE SAME ARE EXPRESSLY RESERVED. IT IS SUBMITTED UNDER A CONFIDENTIAL RELATIONSHIP FOR A SPECIFIED PURPOSE AND THE RECIPIENT AGREES BY ACCEPTING THIS DRAWING NOT TO SUPPLY OR DISCLOSE ANY INFORMATION REGARDING IT TO ANY UNAUTHORIZED PERSON TO INCORPORATE IN OTHER PROJECTS ANY SPECIAL FEATURES PECULIAR TO THIS DESIGN. ALL PATENT RIGHTS HERETO ARE EXPRESSLY RESERVED BY TENSOLITE COMPANY, LONG BEACH, CALIFORNIA 90815.

TOLERANCES AND NOTES EXCEPT AS NOTED

DIMENSIONS ARE IN INCHES.
LINEAR .XX ±.015 .XXX ±.005 ANGULAR ± 1/2°
FRACTION ± 1/32

1. MACHINE FINISH: 63 RMS
2. BREAK ALL SHARP EDGES .003 MAX.
3. MACHINED FILLETS .005 MAX.
4. MACHINED SURFACES SQUARE TO RESPECTIVE AXIS WITHIN .005 INCHES PER INCH.
5. MACHINED DIAMETERS CONCENTRIC WITHIN .002 T.I.R.
6. DIMENSIONS TO BE MET BEFORE PLATING.
7. CHAMFER ALL THREADS 45°.
8. THREADS PER H-28
9. REMOVE FRAYED EDGES ON TEFLON.
10. REMOVE ALL BURRS.

SEE NOTE(S)	-	SEE NOTE(S)	-
MATERIAL	SIZE	SPECIFICATION	PROCUREMENT

NEXT ASSY

APPROVAL INITIALS		DATE
DRAWN BY	AGS	08.26.02
CHECKED		
QUALITY		
ENGINEERING	DNg	08.23.04

Tensolite
HIGH PERFORMANCE CABLES & INTERCONNECT SYSTEMS
Long Beach, California 90815

TITLE: SMA MALE STRAIGHT SEMI-RIGID OR FLEX CABLE

SCALE	SUB-DIRECTORY\FILENAME	SHEET
10:1	OL	1 OF 1

SIZE	CAGE CODE	DRAWING NO.	REV.
C	30990	5213	B