PRODUCT DATA DRAWING

CAD GENERATED DRAWING	DCN CONTROLLED DOCUMENT	DWG.NO. SF2912-6001

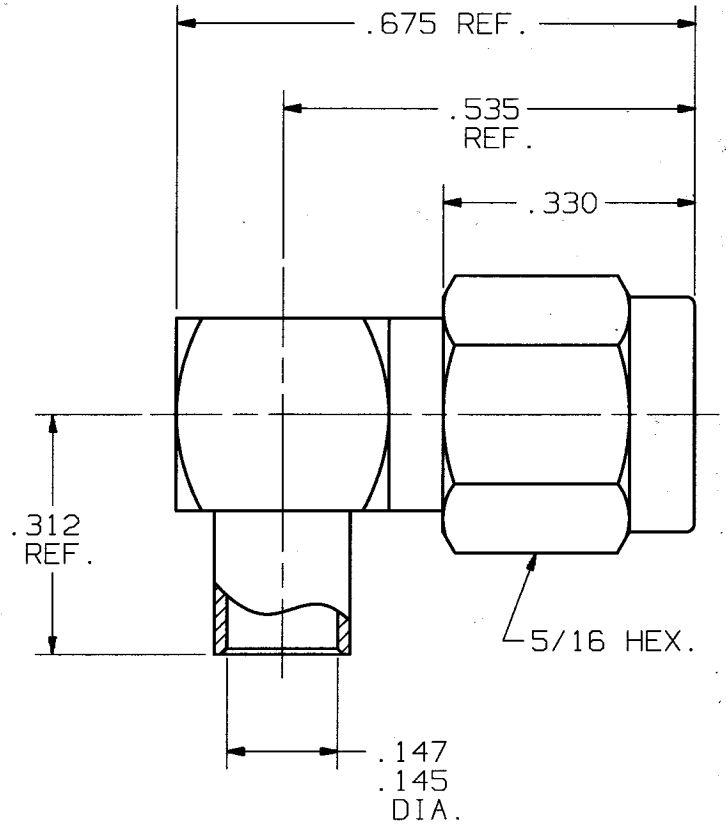

ENG. FILE COPY

MATERIAL:

BODY, FERRULE, COUPLING NUT & CAP:	STAINLESS STEEL PER AMS-5640, UNS S30300, TYPE I.
CONTACT:	BRASS PER ASTM-B-16, ALLOY UNS C36000, H02.
LOCK RING:	BERYLLIUM COPPER PER ASTM-B-196, ALLOY C17300, COND. TD04.
INSULATOR:	TEFLON ASTM-D-1457.
GASKET:	SILICONE RUBBER PER ZZ-R-765, CLASS IIB, GRADE 50/60.

FINISH:

BODY, FERRULE & CAP:	GOLD PER MIL-G-45204, TYPE I, GRADE C, CLASS 0; OVER NICKEL PER QQ-N-290, CLASS 2.
COUPLING NUT:	PASSIVATED PER QQ-P-35C, TYPE II.
CONTACT:	GOLD PER MIL-G-45204, TYPE I, GRADE C, CLASS 1; OVER NICKEL PER QQ-N-290, CLASS 1.

IMPEDANCE:	50 OHMS
FREQ. RANGE:	DC-12.4 GHz
D.W.V.:	1500 VRMS
INSUL. RES.:	5000 MEGOHMS MIN.

SYM.	DESCRIPTION	DATE	APPR.
B	REV. DCN F10201	10/85	ND
C	REV. DCN 23364	4/97	

UNLESS OTHERWISE SPECIFIED:
1) ALL DIMENSIONS ARE AFTER PLATING.
2) BREAK CORNERS & EDGES .005 R.MAX.
3) CHAM. 1st & LAST THDS.
4) SURFACE ROUGHNESS 63 √ MIL-STD-10.
5) DIAS. ON COMMON CENTERS TO BE CONCENTRIC WITHIN .005 T.I.R.
6) REMOVE ALL BURRS.

REDRAWN: BRT 4/04/97
CHECKED: CT 10/15/85
APPROVED: ND 10/16/85

DIMENSIONS ARE IN INCHES
TOLERANCES:

DECIMALS	FRACTIONAL	ANGULAR
.X ±.030	±1/64	X° ±1°0′
.XX ±.015		X°X′ ±15′
.XXX ±.005		

MATERIAL: SEE ABOVE
FINISH: SEE ABOVE
AREA: N/A

SIZE	CAGE NO.	SCALE
A	95077	5X

Solitron Vector Microwave
3301 ELECTRONICS WAY
WEST PALM BEACH, FL, 33407

TITLE: SMA, PLUG, RIGHT ANGLE SOLDER ON FOR .141 SEMI-RIGID

DWG.NO. SF2912-6001