CAD GENERATED DRAWING	DCN CONTROLLED DOCUMENT	DWG.NO. M83517/6-31001

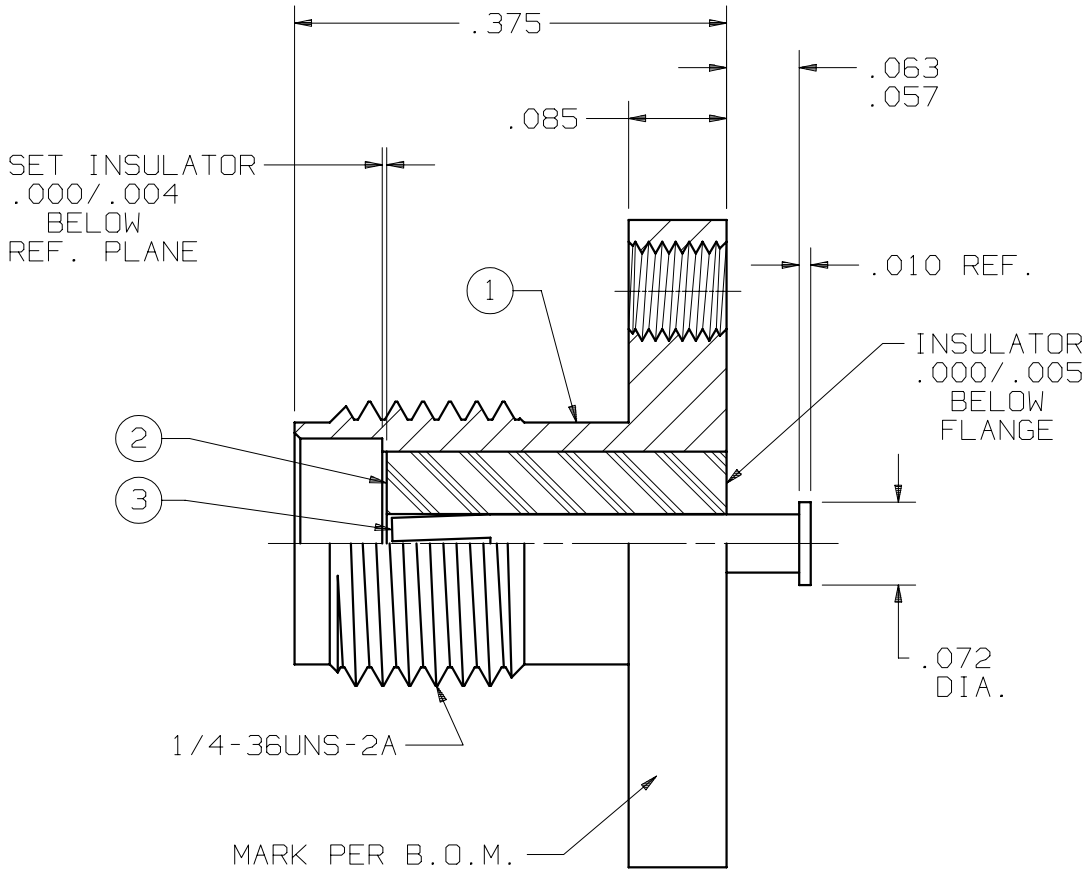

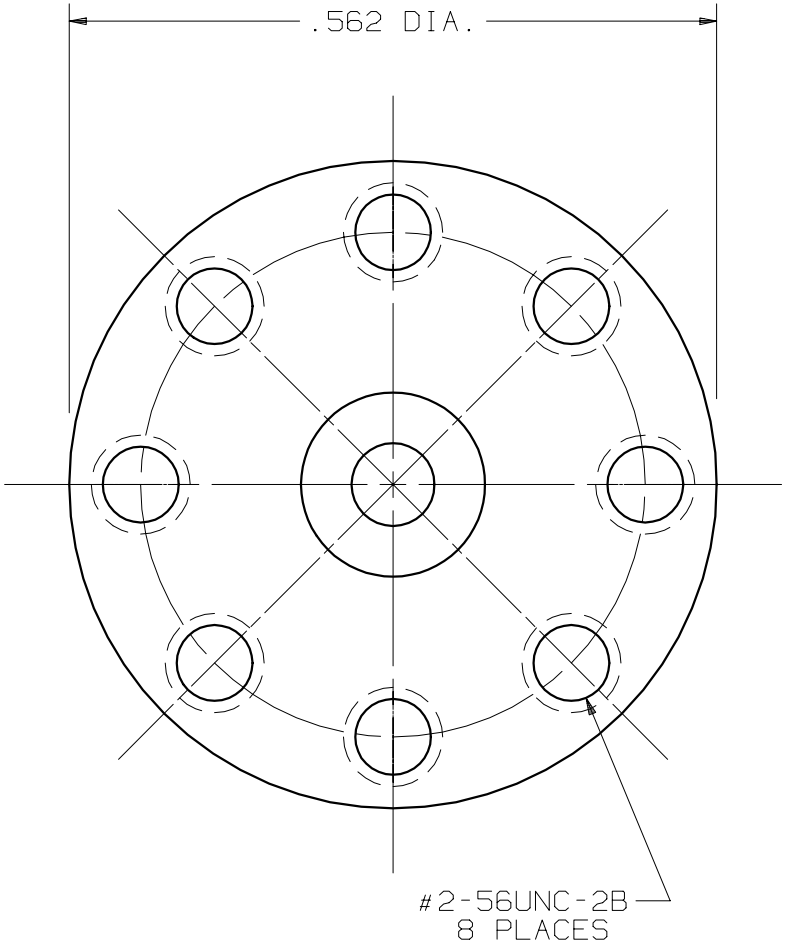

NOTES:
1) MATING END DIMENSIONS PER MD-107.
2) SUPPLY ITEM 3 LOOSE WITH CONNECTOR.

SYM.	DESCRIPTION	DATE	APPR.
A	REV.DCN 20697	5/93	DWC
B	REV.DCN 28345	05/02	STW

UNLESS OTHERWISE SPECIFIED:
1) ALL DIMENSIONS ARE AFTER PLATING.
2) BREAK CORNERS & EDGES .005 R.MAX.
3) CHAM. 1st & LAST THDS.
4) SURFACE ROUGHNESS 63 √ MIL-STD-10.
5) DIAS. ON COMMON CENTERS TO BE CONCENTRIC WITHIN .005 T.I.R.
6) REMOVE ALL BURRS.

REDRAWN: MEB 05/07/02
CHECKED:
APPROVED: RG 06/18/86

DIMENSIONS ARE IN INCHES
TOLERANCES:

DECIMALS	FRACTIONAL	ANGULAR
.X ±.030	±1/64	X° ±1°0′
.XX ±.015		X°X′ ±15′
.XXX ±.005		

MATERIAL: SEE P/L
FINISH: SEE P/L
AREA: N/A

SIZE	CAGE NO.	SCALE
A	95077	6X

SV Microwave, Inc.
2400 Centrepark West Drive, Suite 100
West Palm Beach, FL 33409

TITLE: SMA JACK STRIPLINE LAUNCHER PANEL MOUNT

DWG.NO. SHT. 1 OF 2 M83517/6-31001