THIS DRAWING IS UNPUBLISHED. RELEASED FOR PUBLICATION –,– .
© COPYRIGHT – BY TYCO ELECTRONICS CORPORATION. ALL RIGHTS RESERVED.

| LOC | DIST |
|---|---|
| AJ | 00 |

REVISIONS

| P | LTR | DESCRIPTION | DATE | DWN | APVD |
|---|---|---|---|---|---|
| | T1 | REV PER ECO 06-027516 | 1/17/2007 | DW | JL |

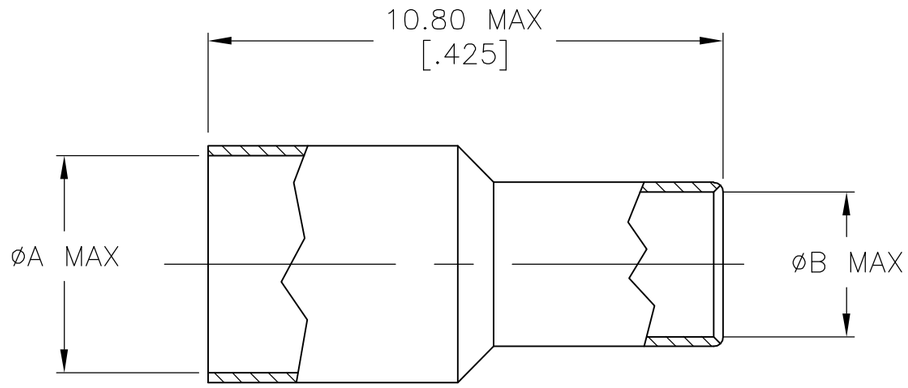


1. SILVER PLATE PER QQ-S-365 5.08 μm [.000200] MINIMUM THICK.
2. TIN-LEAD PLATE PER ASTM-B-545 2.54 μm [.000100] MINIMUM THICK, WITH SUPPLEMENTAL ANTI FRETTING LUBRICANT.
3. GOLD PLATE PER MIL-G-45204 0.76 μm [.000030] MINIMUM THICK.
4. MATTE TIN PLATE PER ASTM-B-545 2.54 μm [.000100] MINIMUM THICK, WITH SUPPLEMENTAL ANTI FRETTING LUBRICANT.

| B | A | FINISH | PART NUMBER |
|---|---|---|---|
| 3.05 [.120] | 3.86 [.152] | 1 | 9-328666-3 |
| 3.73 [.147] | 4.55 [.179] | 4 | 9-328666-2 |
| 3.05 [.120] | 3.86 [.152] | 4 | 9-328666-1 |
| 3.05 [.120] | 4.55 [.179] | 4 | 9-328666-0 |
| 3.40 [.134] | 4.55 [.179] | 2 | 3-328666-9 |
| 5.03 [.198] | 5.51 [.217] | 2 | 3-328666-6 |
| 3.73 [.147] | 4.55 [.179] | 2 | 3-328666-3 |
| 3.05 [.120] | 3.86 [.152] | 2 | 2-328666-7 |
| 3.05 [.120] | 4.55 [.179] | 3 | 2-328666-6 |
| 3.05 [.120] | 4.55 [.179] | 2 | 2-328666-5 |
| 3.05 [.120] | 4.55 [.179] | 1 | 2-328666-3 |
| 3.05 [.120] | 3.86 [.152] | 1 | 328666 |

THIS DRAWING IS A CONTROLLED DOCUMENT.

DIMENSIONS: mm [INCHES]

TOLERANCES UNLESS OTHERWISE SPECIFIED:
0 PLC ± –
1 PLC ± –
2 PLC ± –
3 PLC ± –
4 PLC ± –
ANGLES ± –

MATERIAL: COPPER: QQ-C-576

FINISH: SEE TABLE

DWN J. LIPPERT 28MAR01
CHK R.E.RUTH 7/27/90
APVD M. SNEED 7/27/90
PRODUCT SPEC —
APPLICATION SPEC —
WEIGHT —

tyco Electronics
Tyco Electronics Corporation
Harrisburg, PA 17105-3608

NAME: FERRULE

| SIZE | CAGE CODE | DRAWING NO | RESTRICTED TO |
|---|---|---|---|
| A3 | 00779 | C-328666 | — |

CUSTOMER DRAWING

SCALE 1:1 SHEET 1 OF 1 REV T1