THIS DRAWING IS UNPUBLISHED. RELEASED FOR PUBLICATION ,19 .
© COPYRIGHT 19 BY AMP INCORPORATED. ALL RIGHTS RESERVED.

LOC	DIST
AJ	16

REVISIONS

P	LTR	DESCRIPTION	DATE	DWN	APVD
	H	REDRAW ON CAD & SUPSD 329041, OBS -25 PER EC 0220-0497-95	15NOV95	MC	FM
	J	REVISED PER EC 0503-0414-96	19DEC96	MC	FM

1. COPPER PER ASTM-B-152
2. GOLD PLATE PER MIL-G-45204, 0.08µm [.0000030] MIN THICKNESS
3. SILVER PLATE PER QQ-S-365, 5.08µm [.000200] MIN THICKNESS
4. TIN-LEAD PLATE PER ASTM-B-545, 2.54µm [.000100] MIN THICKNESS

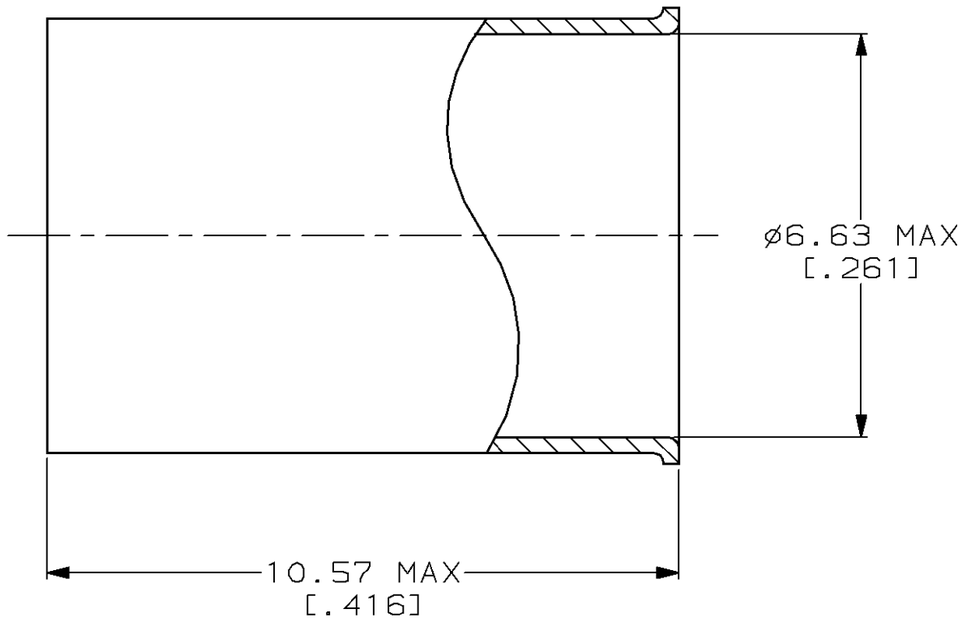

OBSOLETE	4	2-329041-5
	4	2-329041-3
OBSOLETE	2	2-329041-1
	3	329041
	FINISH	PART NUMBER

THIS DRAWING IS A CONTROLLED DOCUMENT FOR AMP INCORPORATED. IT IS SUBJECT TO CHANGE AND THE CONTROLLING ENGINEERING ORGANIZATION SHOULD BE CONTACTED FOR THE LATEST REVISION.

DIMENSIONS: mm [INCHES]

TOLERANCES UNLESS OTHERWISE SPECIFIED:
0 PLC ±-
1 PLC ±-
2 PLC ±-
3 PLC ±-
4 PLC ±-
ANGLES ±-

MATERIAL SEE NOTES
FINISH SEE TABLE

DWN MICHAEL E. COWHER 10NOV95
CHK FRANK MORANA 10NOV95
APVD FRANK MORANA 10NOV95
PRODUCT SPEC –
APPLICATION SPEC –
WEIGHT –
CUSTOMER DRAWING

AMP Incorporated
Harrisburg, PA 17105-3608

NAME FERRULE

SIZE	CAGE CODE	DRAWING NO
A3	00779	C-329041

SCALE	SHEET	REV
10:1	1 OF 1	J

AMP1470-19 REV 10/93