PART NUMBER	ITEM 1 BODY	ITEM 2 REAR BODY	ITEM 3 CENTER CONTACT	ITEM 4 INSULATOR	ITEM 5 END CAP	ITEM 6 RETENTION CLIP	ITEM 7 SLEEVE
130-0303-101	BRASS GOLD PL .00001MIN OVER NICKEL PL .00005MIN OVER COPPER PL .00005MIN	BRASS GOLD PL .00001MIN OVER NICKEL PL .00005MIN OVER COPPER PL .00005MIN	BERYLLIUM COPPER GOLD PL .00005MIN OVER NICKEL PL .00005MIN OVER COPPER PL .00005MIN	TEFLON	BRASS GOLD PL .00001MIN OVER NICKEL PL .00005MIN OVER COPPER PL .00005MIN	BERYLLIUM COPPER NICKEL PL .00005MIN OVER COPPER PL .00005MIN	BRASS GOLD PL .00001MIN OVER NICKEL PL .00005MIN OVER COPPER PL .00005MIN

DRAWING NO.
130-0303-101

REVISIONS

A	ENGINEERING RELEASE					
	12-13-12	MW	GZ	LM		

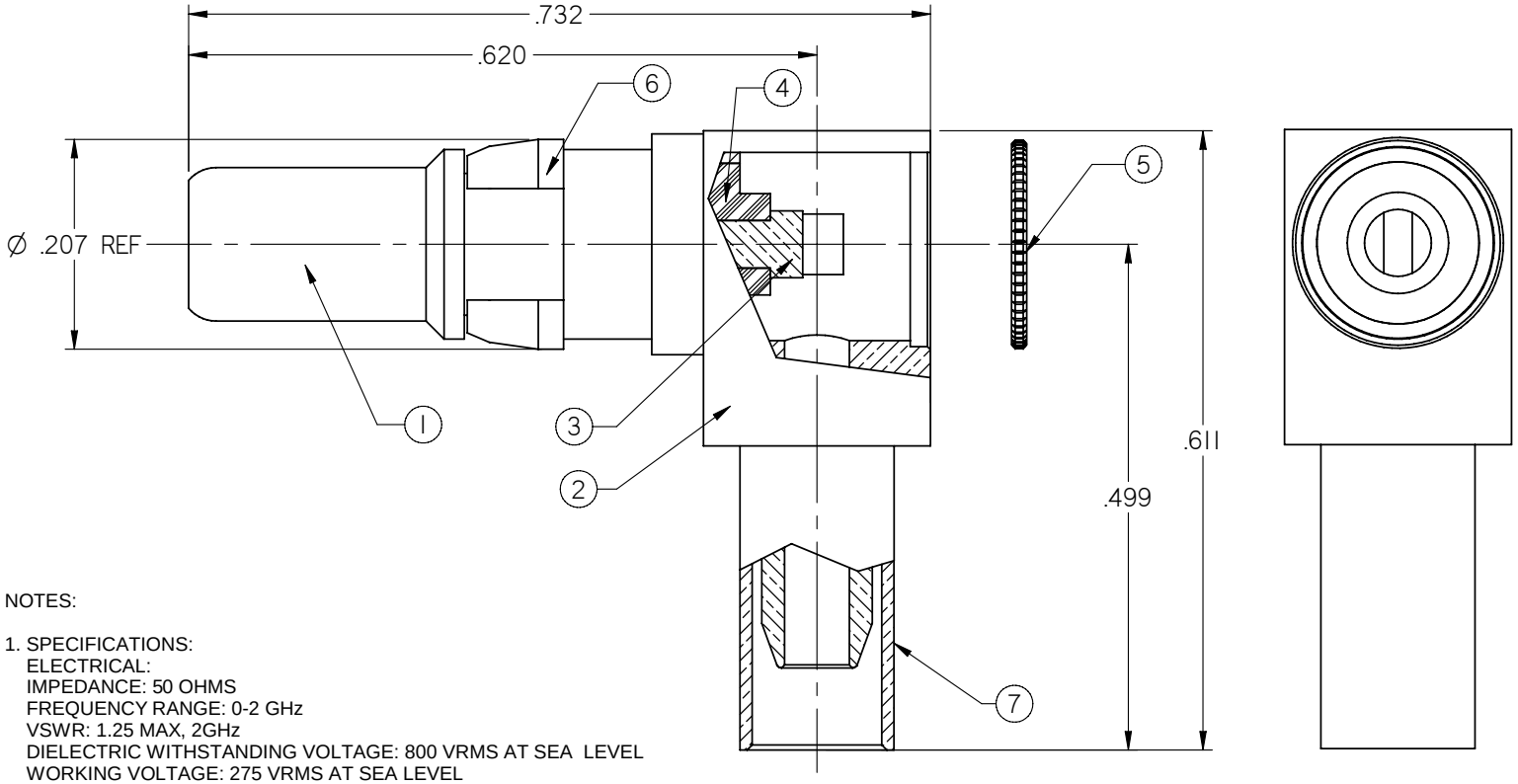

NOTES:

1. SPECIFICATIONS:
   ELECTRICAL:
   IMPEDANCE: 50 OHMS
   FREQUENCY RANGE: 0-2 GHz
   VSWR: 1.25 MAX, 2GHz
   DIELECTRIC WITHSTANDING VOLTAGE: 800 VRMS AT SEA LEVEL
   WORKING VOLTAGE: 275 VRMS AT SEA LEVEL
   CABLE: RG 174/U

   MECHANICAL:
   ENGAGEMENT FORCE: 4 LBS MAX
   CONTACT RETENTION:4 LBS MIN
   CABLE RETENTION: 20 LBS MIN AXIAL FORCE
   DURABILITY: 500 CYCLES MIN

   ENVIRONMENTAL:
   OPERATING TEMPERATURE: -55 ℃ TO 125 ℃
   THERMAL SHOCK: -55 ℃ TO 125 ℃ PER MIL-STD-1344, METHOD 1003, COND.A
   MECHANICAL SHOCK: 50G'S PER MIL-STD-1344, METHOD 2004, COND.A
   SALT SPRAY: 48 HOURS PER MIL-STD-1344, METHOD 1001, COND.B
   MOISTURE RESISTANCE: 240 HOURS PER MIL-STD-1344, METHOD 1002, COND. II

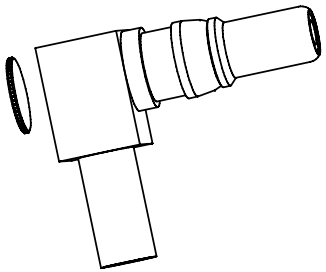

2. CABLE ASSEMBLY, FOR CABLE RG 174/U, THE SLEEVE CRIMP DIE HEX: HEX .128 REF.

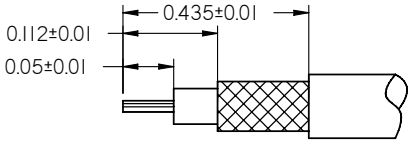

CABLE STRIP DIMENSIONS

2 SLEEVE CRIMP DIE HEX

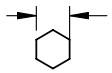

RECOMMENDED HEX CRIMP

CUSTOMER DRAWING

THIS DRAWING TO BE INTERPRETED PER ANSI Y 14.5M - 1994

COMPANY CONFIDENTIAL

TOLERANCE UNLESS OTHERWISE SPECIFIED		DRAWN BY Monica W	DATE 12-13-12
DECIMALS	INCH	CHECKED BY Gary Z	DATE 12-13-12
X.X	-----		
X.XX	-----	APPROVED BY Lin M	DATE 12-13-12
X.XXX	±0.025		
ANGLES	± 0.5°	U/M INCH	

THIS DRAWING WAS PRODUCED BY COMPUTER, DO NOT SCALE DRAWING OR UPDATE MANUALLY.

EMERSON. Network Power — Connectivity Solutions

TITLE
PIN CONTACTS ASSY,
RA CABLE TYPE, SIZE 8
RG 174/U, 50 OHM

SHEET	DRAWING NO.	SIZE
1 OF 1	130-0303-101	C