REVISIONS			
REV	DESCRIPTION	DATE	BY
-	INITIAL RELEASED	06.26.09	HN

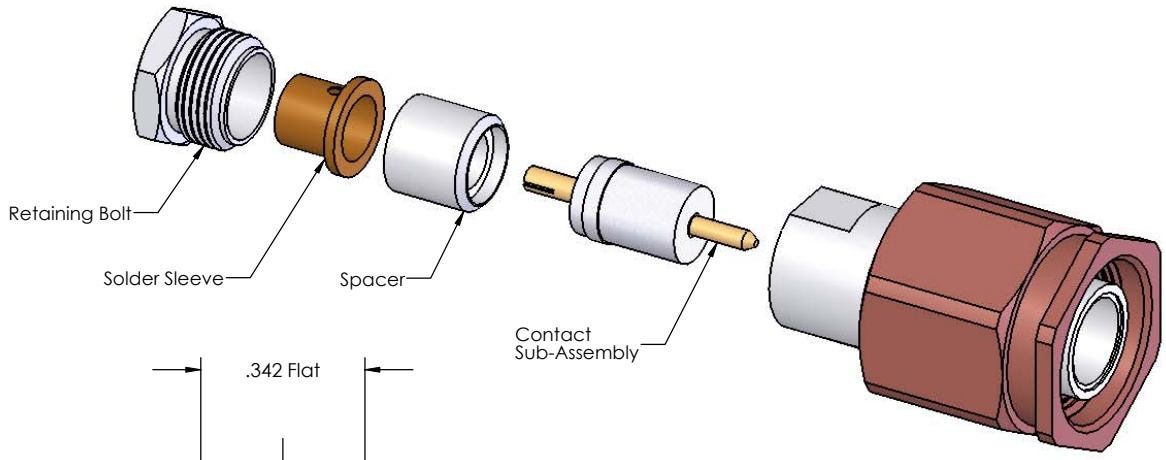

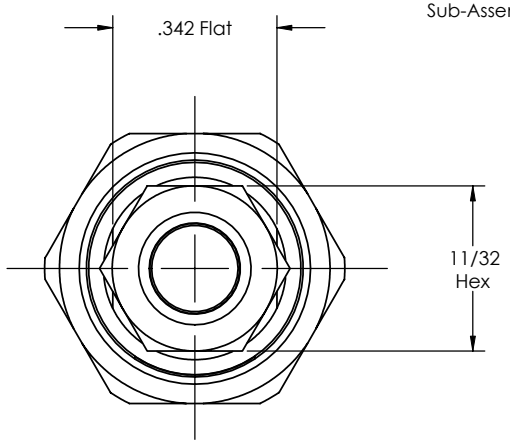

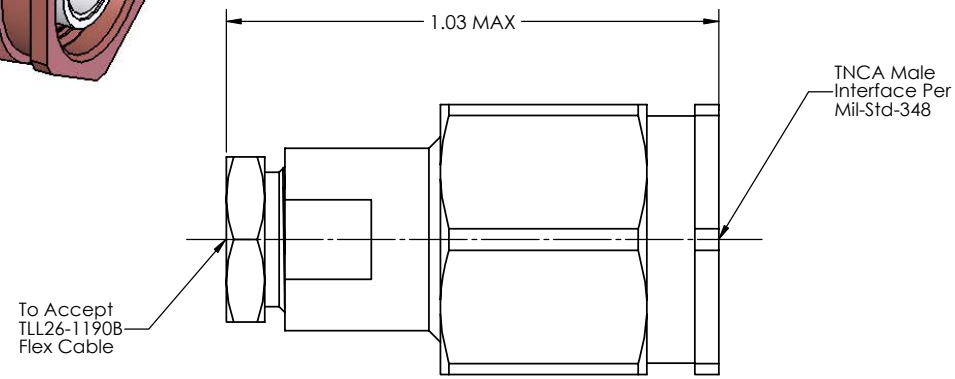

Nothe(s):
1. Retaining Bolt, Solder Sleeve, Spacer and Contact Sub-Assembly to be packaged and shipped unassembled.

MATERIAL(S):

Body, Coupling Nut, Retaining Bolt, And Spacer:
303 sst per ASTM A 582.

Center Conductor, Solder Sleeve, And Retaining Ring:
BeCu alloy C17300 per ASTM B 196.

Insulator:
Teflon, PTFE, per ASTM D 1710.

Gasket:
Silicone rubber per A-A-59588.

ELECTRICAL:

Impedance: 50 Ohms Nom.
Freq. Range: DC TO 18 GHz
VSWR: 1.2:1 @ 18GHz
Insertion Loss: .20 dB DC - 16GHZ
.32 dB 16GHz to 18GHz
Working Voltage: 500 Vrms @ Sea Level
Dielectric Withstand Voltage: 1,500 Vrms
RF HiPot Voltage: 1,000 Vrms Min @ 5MHz
Corona Level: 375 Vrms @ 70,000 ft
Insulation Resistance: 5,000 MegaOhms
Contact Resistance:
Center Conductor:
Before Environmental: 1.5 MilliOhms Max
After Environmental: 2.0 MilliOhms Max
Center Contact:
Before Environmental: .2 MilliOhms Max
RF Leakage: -90dB @ 6 GHz.
-65dB @ 6-18 GHz.

MECHANICAL:

Mating Characteristics:
MIL-STD-348
Force To Engage & Disengage:
Torque: 2 inch-pounds max
Longitudinal Force: NA
Connector Durability:
500 cycles min @ 12 cycles/minute max
Coupling Proof Torque: 15 inch-pounds min.
Coupling Mech. Retention: 100 pounds min.
Center Contact Retention:
Axial Force: 6 Pounds Min.

ENVIRONMENTAL:

Temp. Range: -65°C to +165°C
Thermal Shock:
MIL-STD-202, Method 107, Test Cond. B
Moisture Resistance:
MIL-STD-202, Method 106. Insulation resistance at least 200 MegaOhms within 5 minutes after removal from humidity
Corrosion:
MIL-STD-202, Method 101, Test Cond. B
Vibration:
MIL-STD-202, Method 204, Test Cond. D
Shock:
MIL-STD-202, Method 213, Test Cond. I

FINISH(ES):

Center Conductor:
Gold plate per ASTM B 488, Type II, Code C or D, Class 1.25, over nickel under plate per SAE-AMS-QQ-N-290, Class 1.

Solder Sleeve:
Gold plate per ASTM B 488, Type II, Code C, Class 0.25, over nickel under plate per SAE-AMS-QQ-N-290, Class 1.

Body, Coupling Nut And Retaining Bolt:
Passivate per ASTM A 967 or AMS-QQ-P-35.

APPLICABLE CARLISLE IT DOCUMENTS

WORK STANDARD	PROD INSTRUC	ASSY INSTRUC
NA	NA	AI-688

NOTICE:
THIS DRAWING EMBODIES A CONFIDENTIAL PROPRIETARY DESIGN ORIGINATED BY CARLISLE INTERCONNECT TECHNOLOGIES & ALL DESIGN, MANUFACTURING, REPRODUCTION, USE & SALE RIGHTS REGARDING THE SAME ARE EXPRESSLY RESERVED. IT IS SUBMITTED UNDER A CONFIDENTIAL RELATIONSHIP FOR A SPECIFIED PURPOSE & THE RECIPIENT AGREES BY ACCEPTING THIS DRAWING NOT SUPPLY OR DISCLOSE ANY INFORMATION REGARDING IT TO ANY UNAUTHORIZED PERSON TO INCORPORATE IN OTHER PROJECTS ANY SPECIAL FEATURES PECULIAR TO THIS DESIGN. ALL PATENT RIGHTS HERETO ARE EXPRESSLY RESERVED BY CARLISLE INTERCONNECT TECHNOLOGIES, LONG BEACH, CALIFORNIA 90815.

TOLERANCES AND NOTES EXCEPT AS NOTED
DIMENSIONS ARE IN INCHES.
XX ±.015
LINEAR .XXX ±.005 ANGULAR ± 1/2°
FRACTION ± 1/32

1. MACHINE FINISH: 32 √RMS
2. BREAK ALL SHARP EDGES .003 MAX.
3. MACHINED FILLETS .005 MAX.
4. MACHINED SURFACES SQUARE TO RESPECTIVE AXIS WITHIN .005 INCHES PER INCH.
5. MACHINED DIAMETERS CONCENTRIC WITHIN .002 T.I.R.
6. DIMENSIONS TO BE MET BEFORE PLATING.
7. CHAMFER ALL THREADS 45°.
8. THREADS PER H-28
9. REMOVE FRAYED EDGES ON TEFLON.
10. REMOVE ALL BURRS.

MATERIAL			SIZE	SPECIFICATION	PROCUREMENT
-			-	-	-

APPROVAL	INITIALS	DATE
DRAWN BY	HN	02.09.09
CHECKED BY		
TEST ENGR		
QUALITY		
DESIGN ENGR	HN	06.26.09
MFG. ENGR		

CARLISLE Interconnect Technologies
Long Beach, CA 90815

TITLE: TNCA MALE STRAIGHT FOR FOR TLL26-1190B

SCALE	SUB-DIRECTORY\FILE NAME	SHEET
5:1	OL/	1 OF 1

SIZE	CAGE CODE	DRAWING NO.	REV.
C	30990	9209-7CCSF	-

ENG-DWG REV. C