SPECIFICATION

Part No.	:	**GP.1575.35.3.A.02**
Specification No	:	**GP.35A**
Product Name	:	**3.5mm thick GPS Patch Antenna, 1575MHz**
Features	:	35mm*35mm*3.5mm ROHS Compliant

:

1. Introduction

This 35*35mm ceramic GPS patch antenna is based on smart *XtremeGain*™ technology. It is mounted via pin and double-sided adhesive and has been tuned as the optimal solution for the customer device environment.

2. Key Antenna Performance Indicators

Original Patch Specification tested on 50*50mm ground plane

No	Parameter	Specification
1	Center Frequency	1575MHz ± 6MHz
2	Bandwidth	22MHz min
3	VSWR	1.5 max
4	Gain at Zenith	2.0 dBic typ.
5	Gain at 10°elevation	1.5dBic typ.
6	Axial Ratio	3 dB max
7	Polarization	RHCP
8	Impedance	50 Ohms
9	Frequency Temperature Coefficient（τf ）	0 ± 20ppm / °C
10	Operating Temperature	-40°C to +85°C

3. TEST SET UP

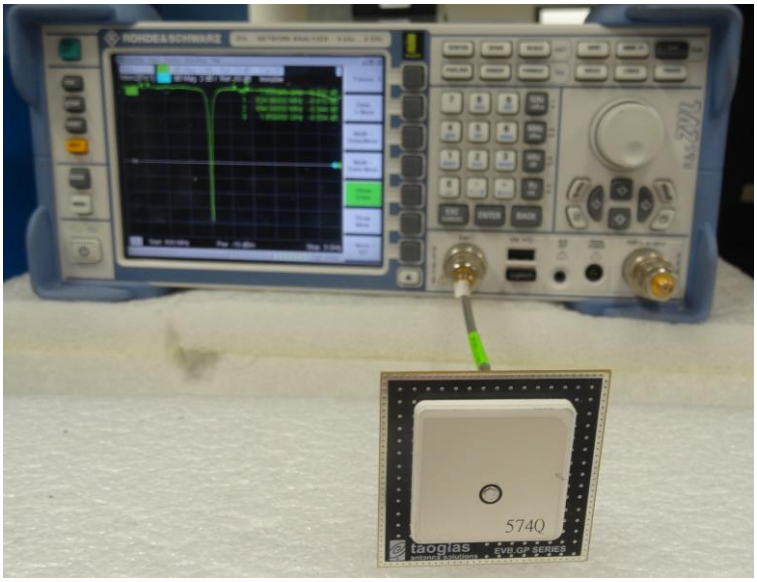

Figure 1. Return Loss measurement.

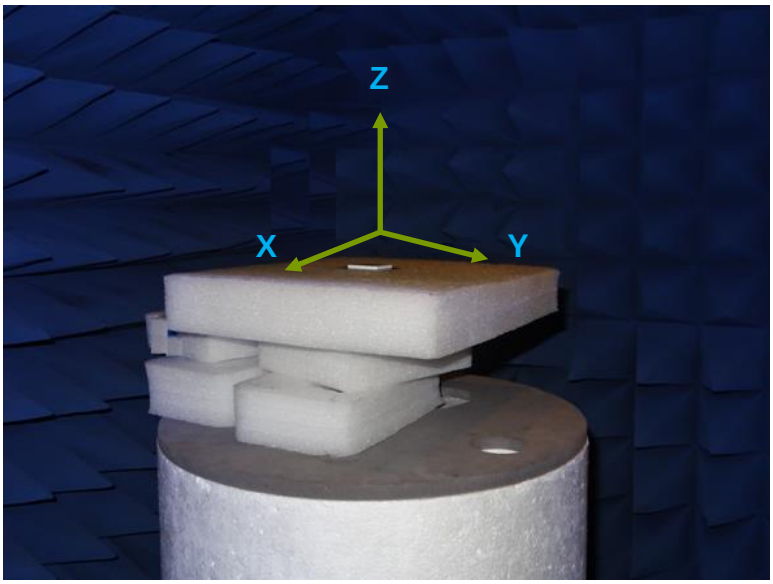

Figure 2. Peak gain, average gain, efficiency and radiation pattern measurements.

4. ANTENNA PARAMETERS

4.1. Return Loss

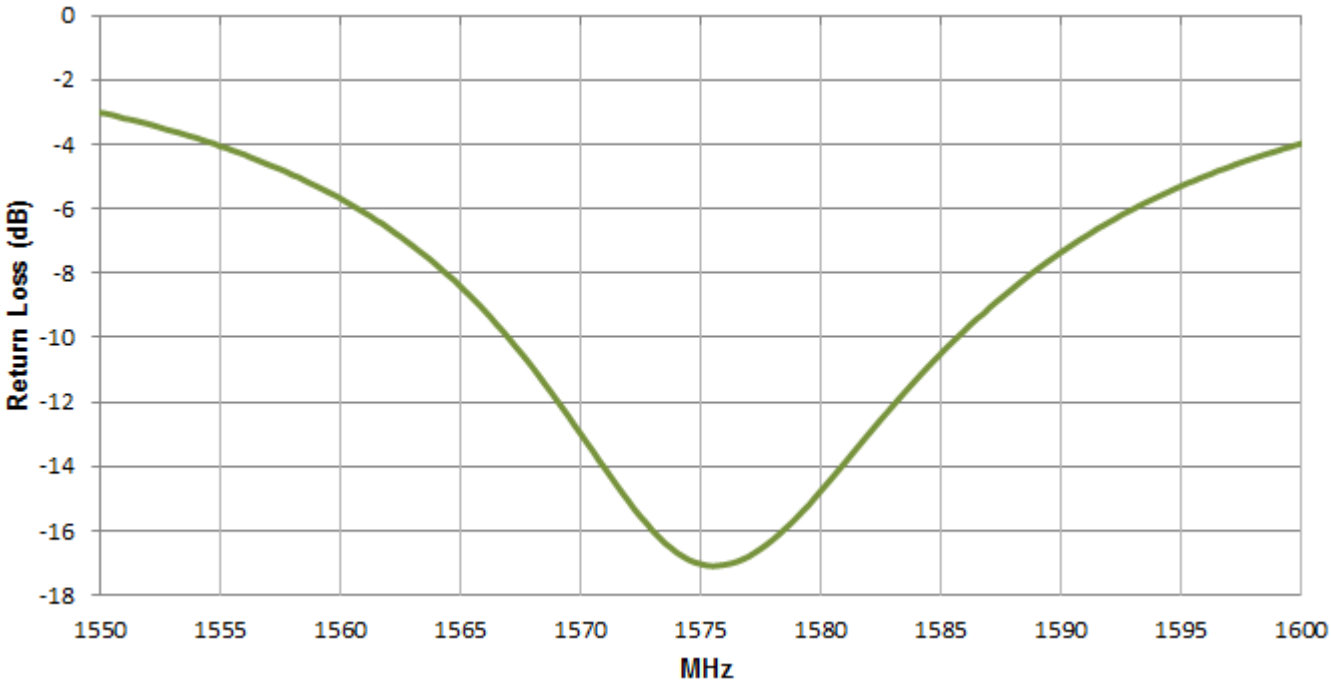

Figure 3. Return Loss of the GP.1575.35.A.02

4.2. VSWR

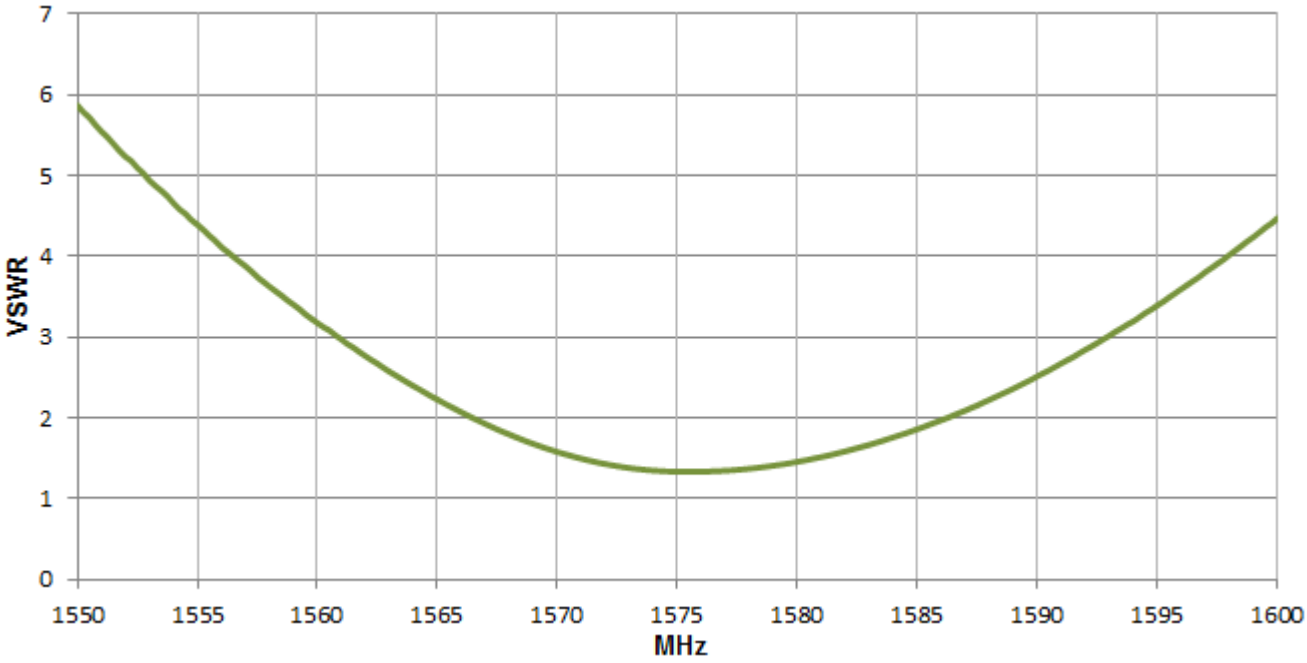

Figure 4. VSWR of the GP.1575.35.A.02

4.3. Efficiency

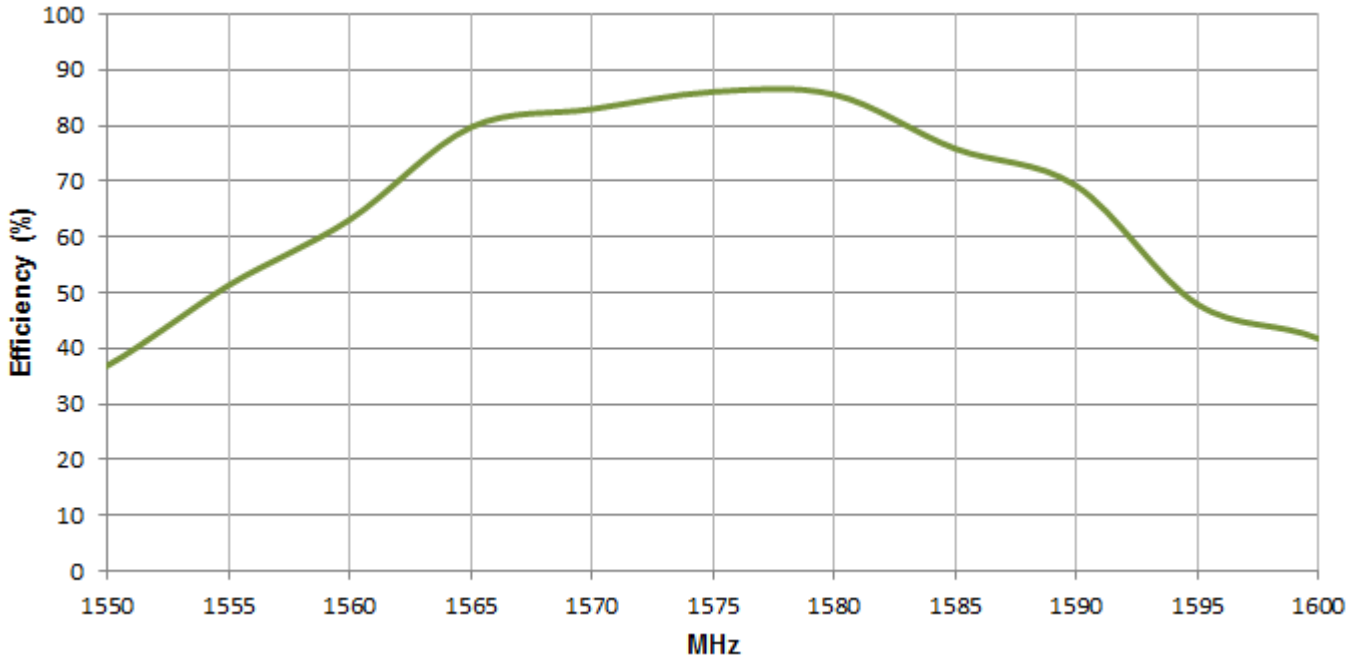

Figure 5. Efficiency of the GP.1575.35.A.02

4.4. Peak Gain

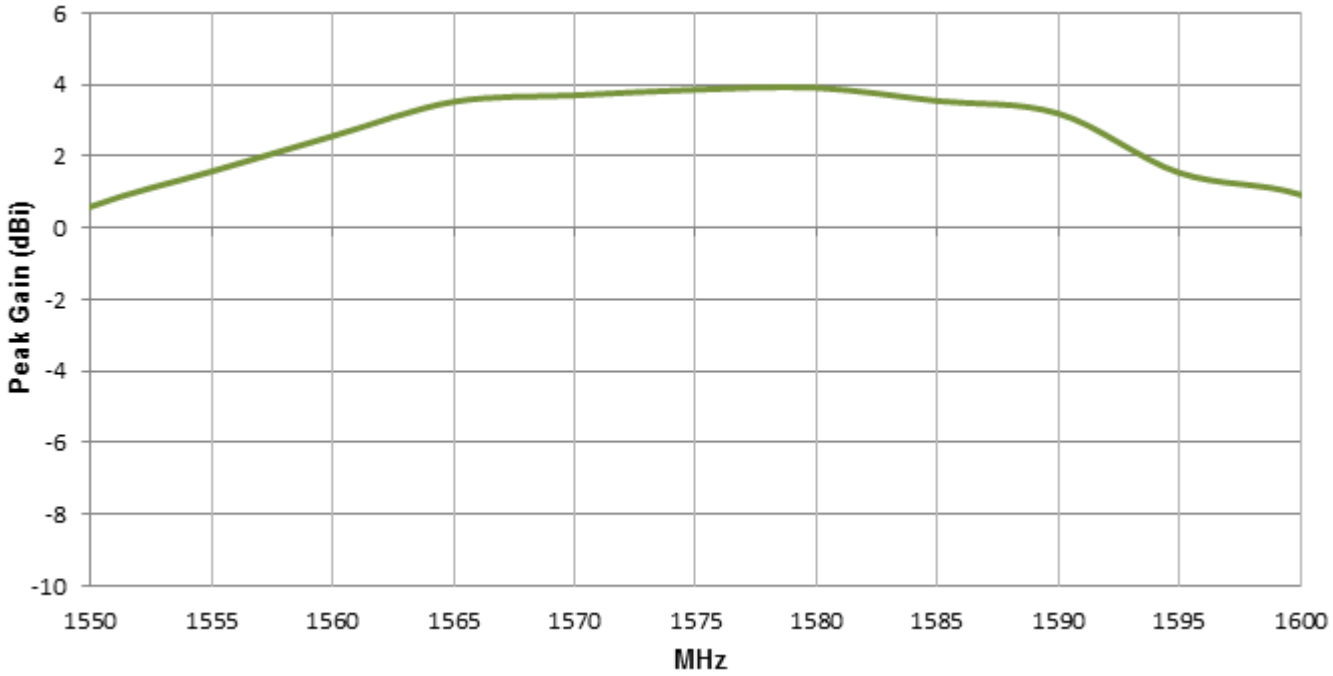

Figure 6. Peak Gain of the GP.1575.35.A.02.

5. 2D Radiation

5.1 XZ Plane Radiation

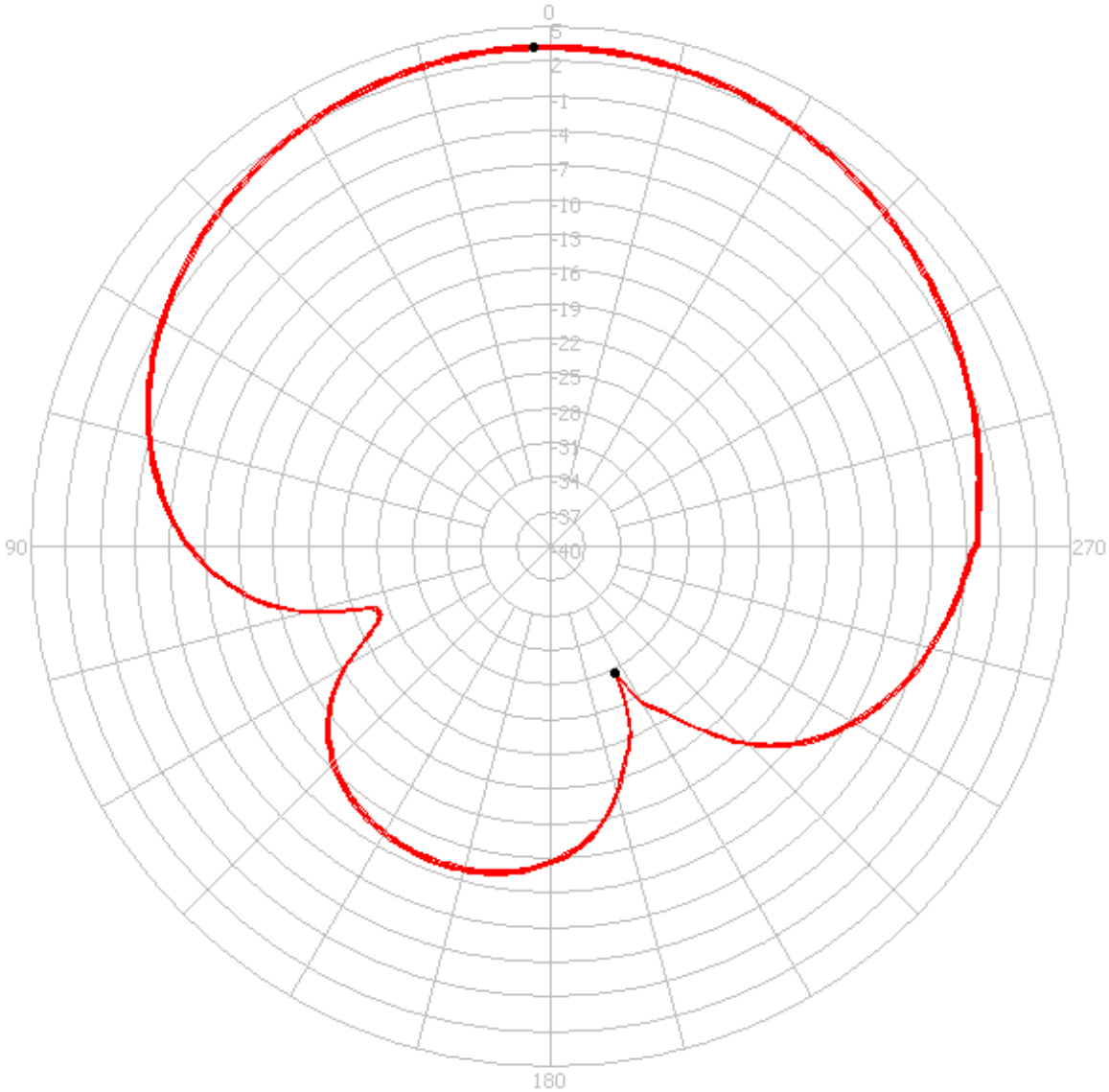

5.2 YZ Plane Radiation

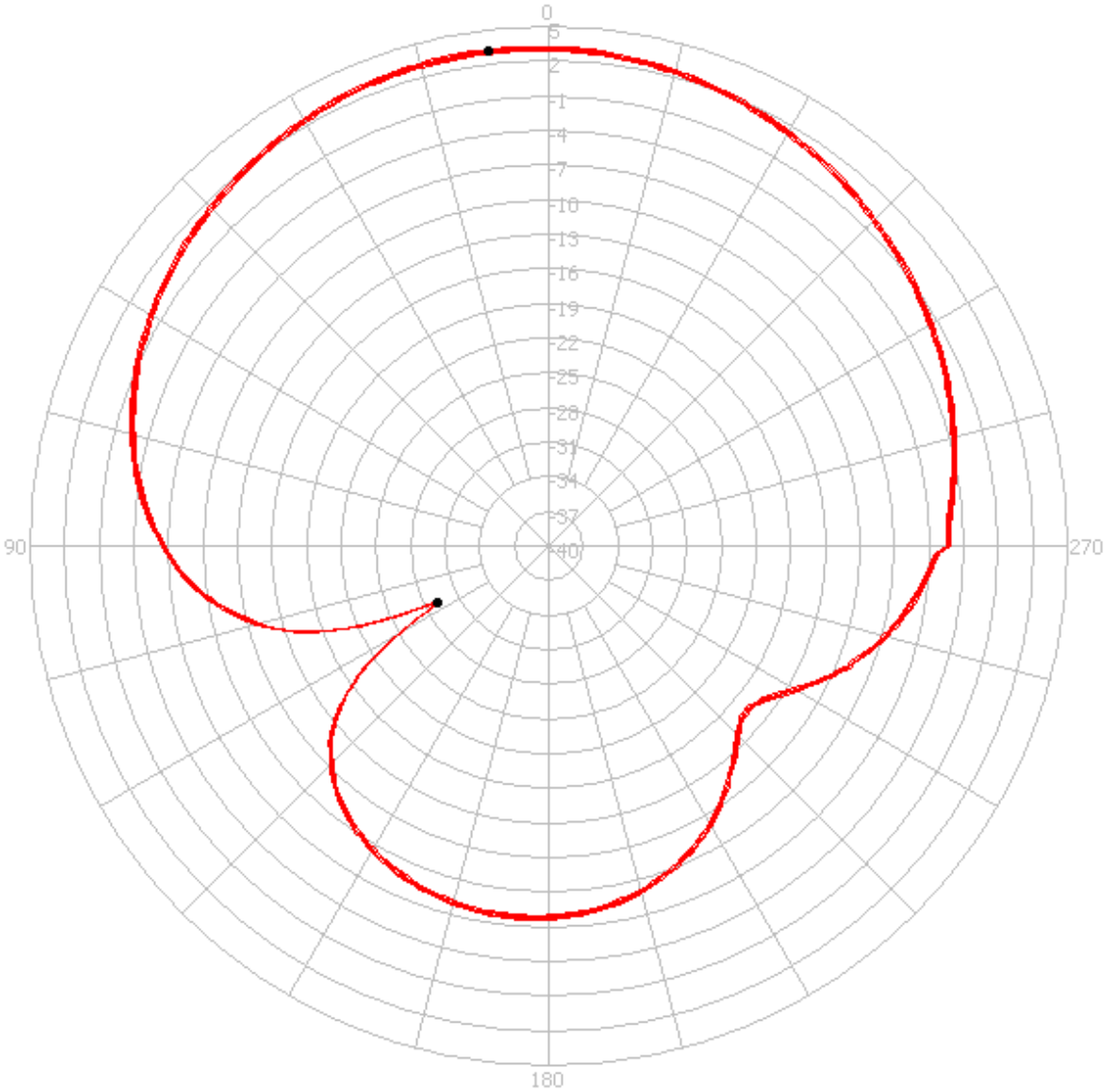

5.3 Axial Ratio

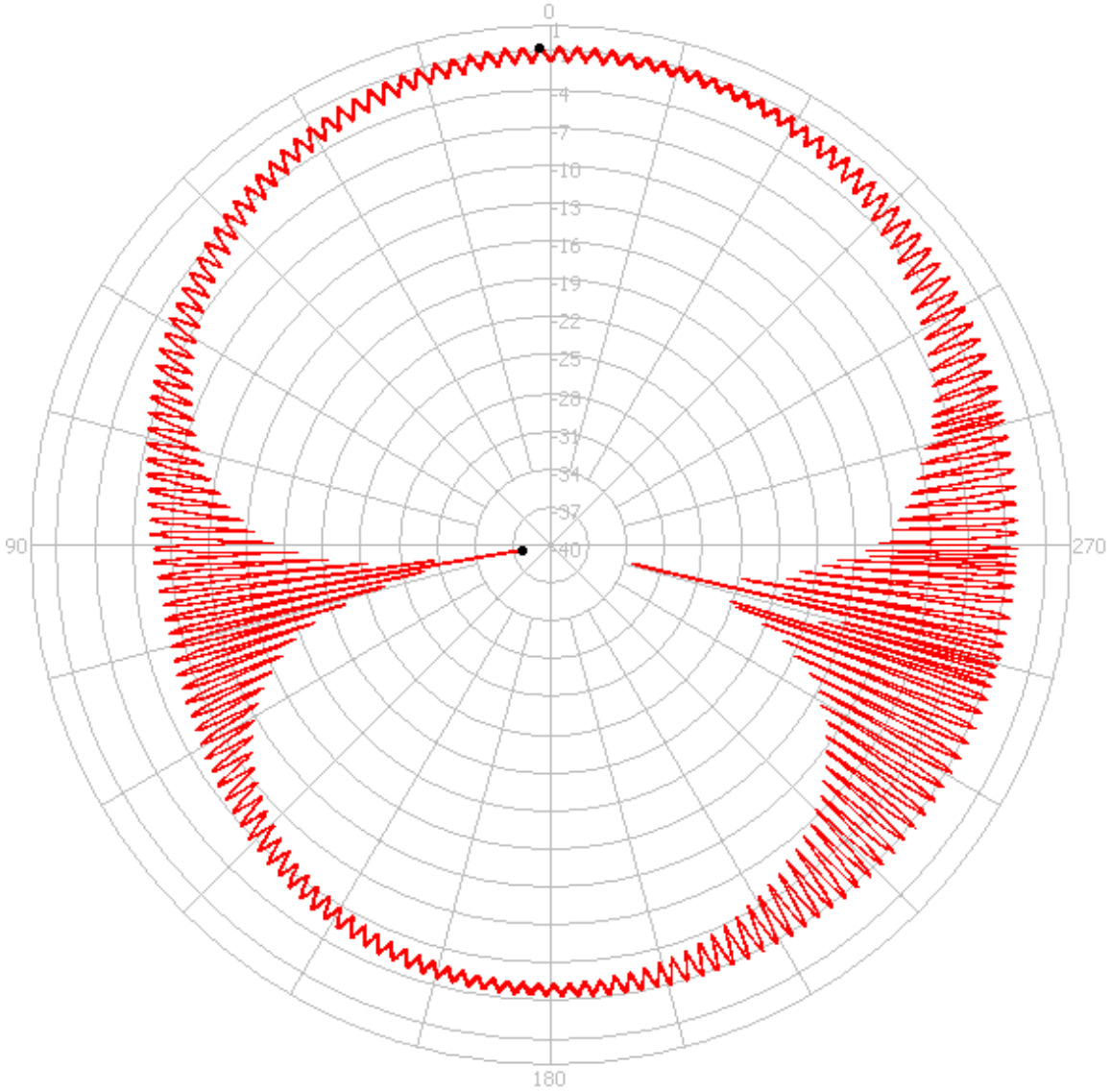

5.4 3D Radiation

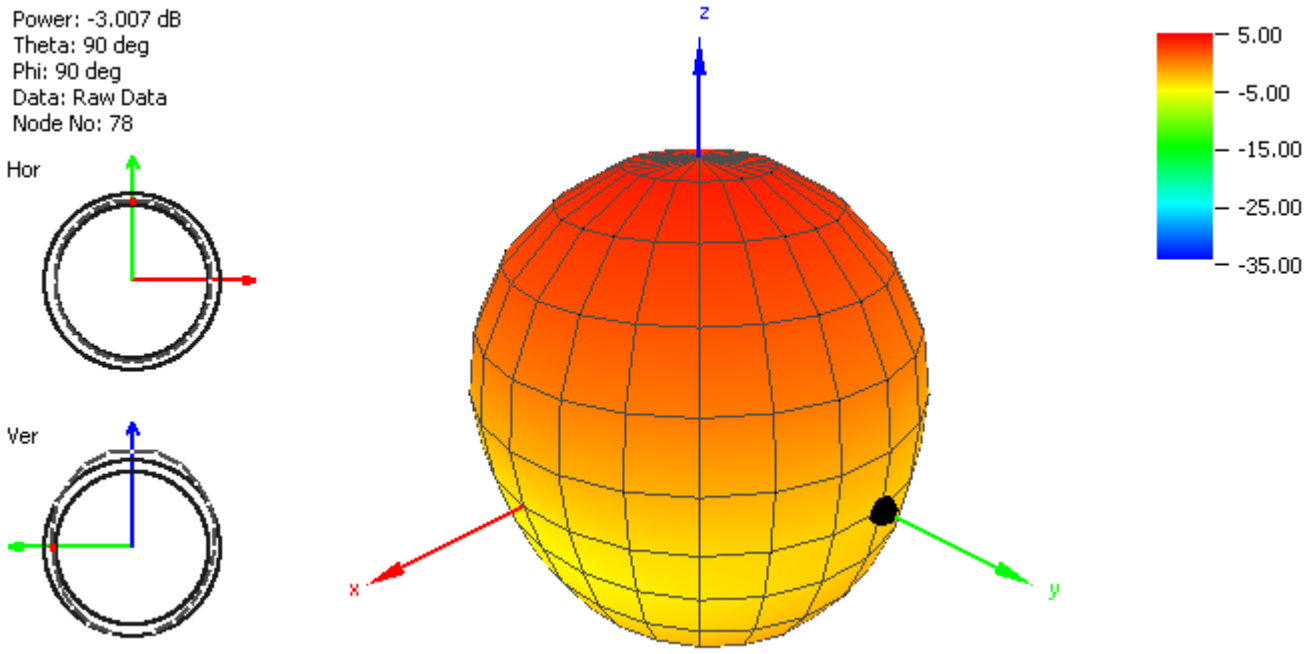

Figure 7. Radiation Pattern of the GP.1575.35.A.02 at 1575Mhz.

6 . Mechanical Drawing

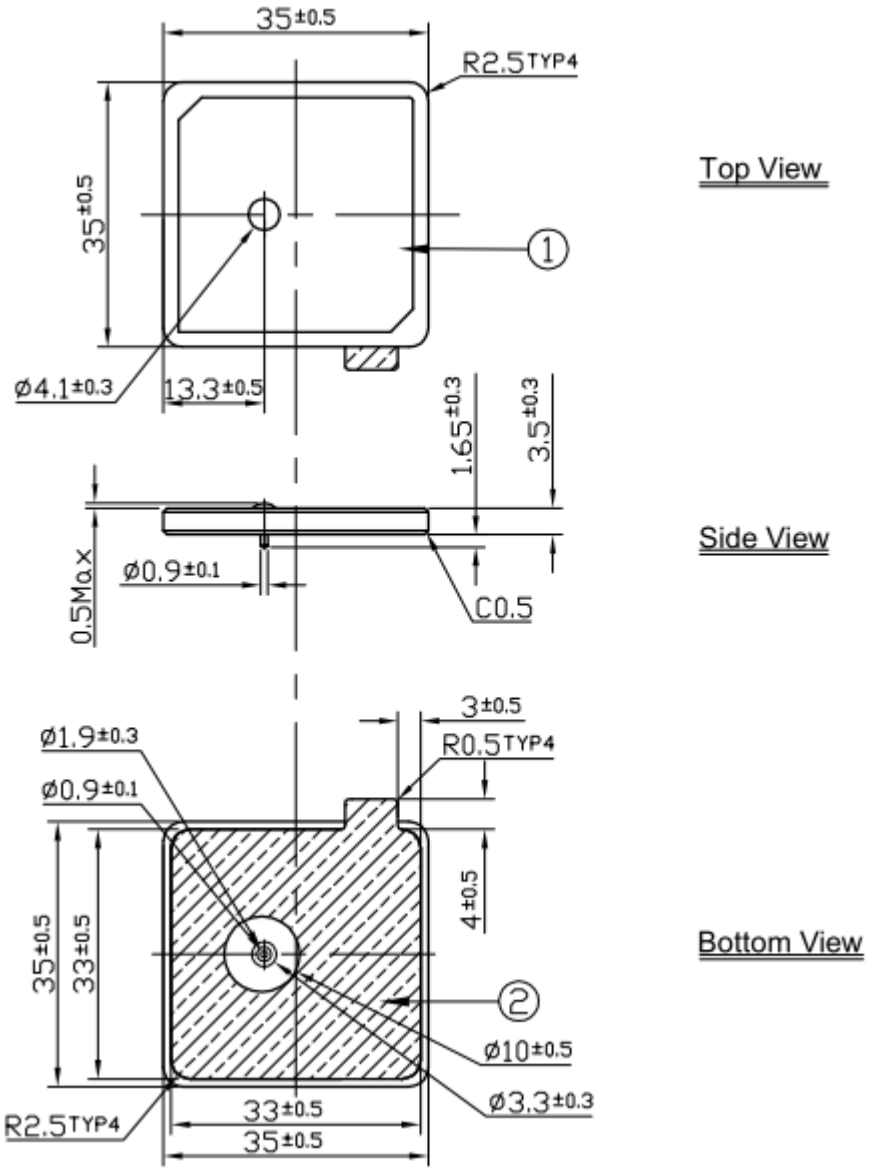

	Name	Material	Finish	QTY
1	GP.35 Patch 35x35x3.5	Ceramic	Clear	1
2	Double sided Adhesive	NITTO 5015	White Liner	1

NOTES:
1.Double sided adhesive area.

6.1 Layout Dimensions

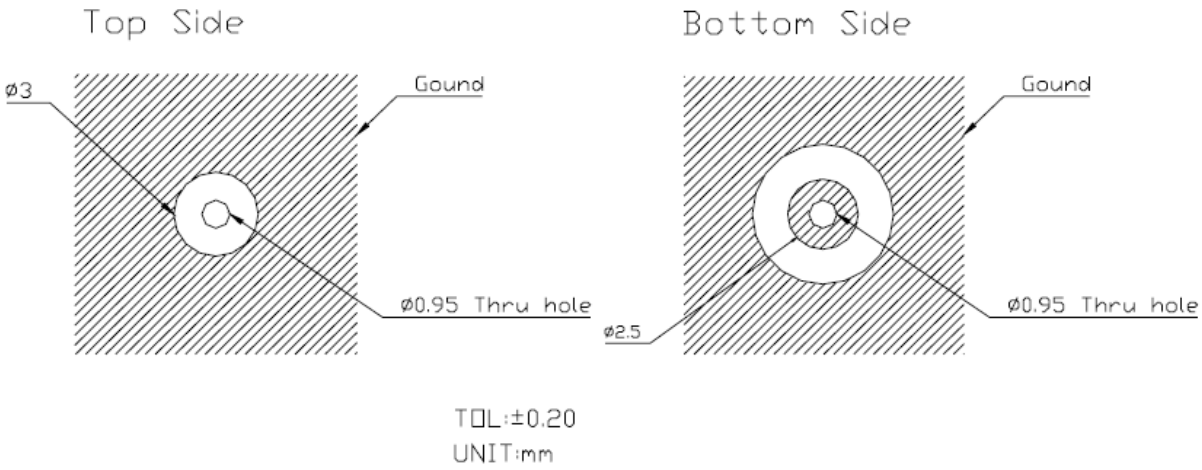

6.2 Test Jig and Dimension

6.3 Test Fixture Antenna Setup and Measurements

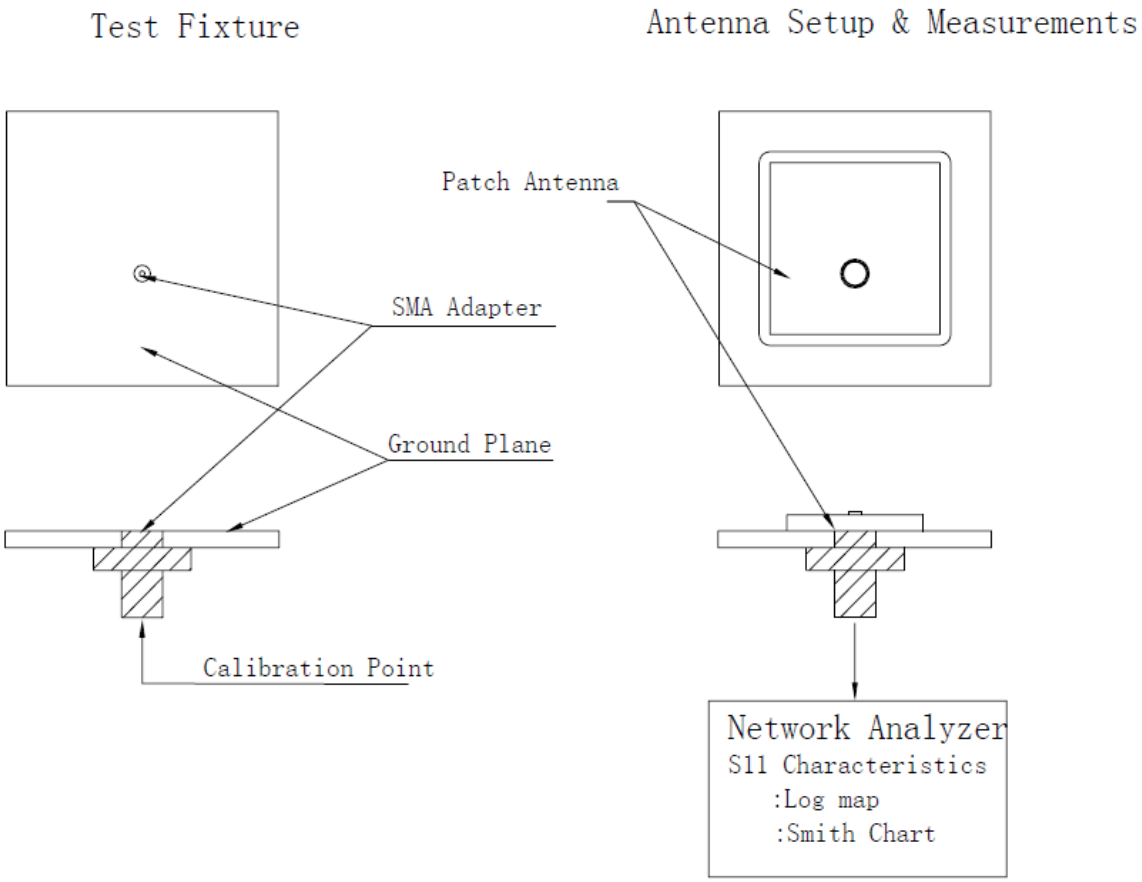

7. Packaging

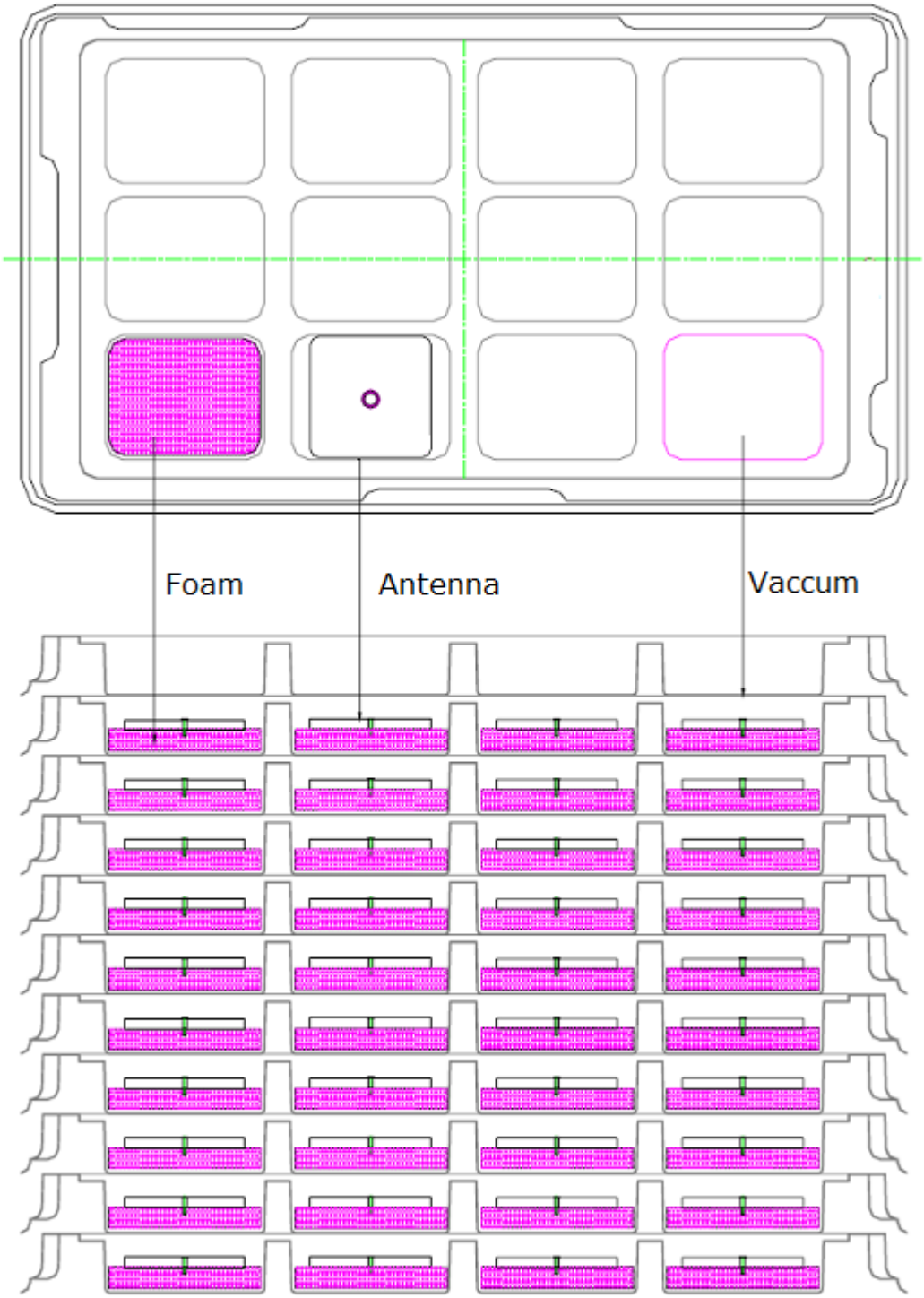

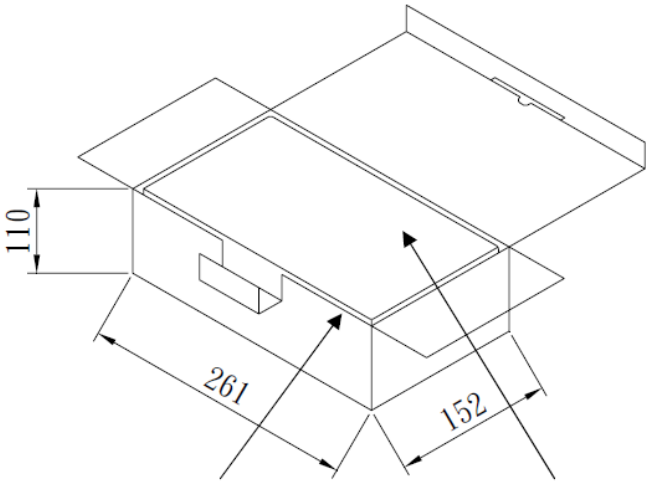

Inside Box DA package disassembly

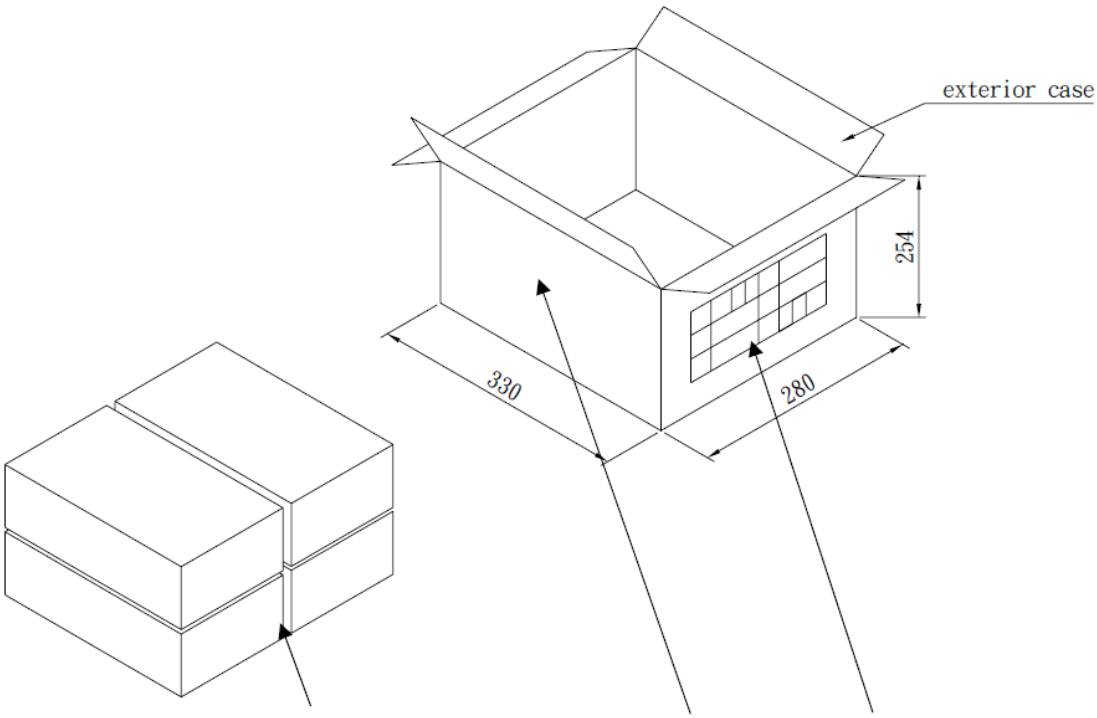

Inside Box Outside Box Shipping Label